Club Car®

2008 DS Golf Cars

Electric and Gasoline

Owner's Manual

Ingersoll Rand
Industrial Technologies

NOTICE

Warranty information appears at the end of this manual. No other warranties, express or implied, are contained herein. Your authorized representative checked the vehicle before it was delivered to you and will provide you a copy of the completed vehicle warranty registration form.

Club Car is not liable for errors in this manual or for incidental or consequential damages that result from the use of the material in this manual.

This vehicle conforms to the current American National Standards Institute's Z130 Safety and Performance Requirements for Golf Cars. This standard, which promotes safety in the design, application, and operation of golf cars, defines a golf car as "a vehicle used to convey a person or persons and equipment to play the game of golf in an area designated as a golf course." Throughout this manual, the words "golf car" and "vehicle" are used interchangeably.

This manual contains proprietary information that is protected by copyright. All rights are reserved. No part of this manual may be photocopied, reproduced, or translated to another language without the written consent of Club Car, Inc.

The information contained in this document is subject to change without notice.

Club Car reserves the right to make design changes to vehicles without obligation to make these changes on units previously sold.

These vehicles do not conform to Federal Motor Vehicle Safety Standards for automobiles or to FMVSS 500 for low-speed vehicles, and are not equipped for operation on public streets, roads, or highways.

P. O. Box 204658
Augusta, Georgia 30917-4658 USA
Telephone 706-863-3000
Service Parts Fax 706-855-7413
www.clubcar.com

Copyright © 2007 Club Car, Inc.
Club Car, Carryall, Intellitrak, and *Precedent* are registered trademarks of Club Car, Inc.
This manual effective August 1, 2007.

FOREWORD

Thank you for choosing Club Car, the name most widely recognized as the industry leader in vehicle efficiency and long-lasting value. You have chosen the finest golf car on the market. Please protect your investment and ensure that your Club Car vehicle(s) provides years of reliable, superior performance by reading and following the maintenance instructions in this manual.

Your comfort and safety are important to us, so we urge you to read and follow the step-by-step operating instructions and safety procedures in this manual. These instructions must be followed in order to avoid the risk of severe personal injury. If you rent or loan your vehicle to others, we recommend that you ask them to read this manual before they operate the vehicle.

Club Car products are backed by a customer support system designed to offer you fast, courteous service. In the event that your Club Car vehicle needs repairs or service, we recommend that your local authorized Club Car representative perform them. For the name and address of the Club Car representative nearest you, logon to our web site at www.clubcar.com or call 1-800-ClubCar (258-2227). If you would prefer to write to us, direct your letter to: Club Car, Attention: Marketing Services, P.O. Box 204658, Augusta, Georgia 30917-4658 USA. Your local authorized Club Car representative can also provide technical advice, parts, and service manuals.

We hope you will consider this owner's manual a permanent part of your Club Car vehicle. If you sell the vehicle, please include the manual so that the next owner will have the important operating, safety, and maintenance information it contains.

REGULAR MAINTENANCE ITEMS	PERIODIC MAINTENANCE ITEMS
Engine Oil Filter (286 cc and 351 cc) CCI P/N 1016467	**Battery (gasoline vehicle)** CCI P/N 1012328
Engine Air Filter (286 cc and 351 cc) CCI P/N 1015426	**Spark Plug O.H.V. (286 cc and 351 cc)** CCI P/N 101881101
Engine Fuel Filter (286 cc and 351cc) CCI P/N 102003201	**Spring Tune-Up Kit** CCI P/N 101611003
Battery Terminal Protector Spray CCI P/N 1014305	**Battery, 12 Volt (electric vehicle)** CCI P/N 102511301 (wet)
Dry Moly Lube CCI P/N 1012151	

TABLE OF CONTENTS

Safety Decal and Feature Identification 4

Practice Safety 9

Proposition 65 – State of California 9

Safety Details 10

General Warnings 10

General Information 12

Model Identification 13

Safety Committee 13

Controls and Indicators 14

Pre-Operation and Daily Safety Checklist 20

Performance Inspection 21

Driving Instructions 22

Towing 24

Transporting on a Trailer 25

Storage – Electric Vehicles 26

Storage – Gasoline Vehicles 27

Maintenance 29

Periodic Service Schedules 30

Periodic Lubrication Schedules 33

Vehicle Controller – Electric Vehicles 35

Batteries – Electric Vehicles 35

Battery Charger – Electric Vehicles 37

Battery – Gasoline Vehicles 40

Engine Oil – Gasoline Vehicles 42

Fueling Instructions – Gasoline Vehicles 45

Cleaning the Vehicle 46

Accessories 46

Subsequent Owner Registration 47

Vehicle Specifications 47

SAFETY DECAL AND FEATURE IDENTIFICATION

The following pages contain safety decal and feature identification information. For detailed information on specific features, read the appropriate section in this manual.

DS ELECTRIC VEHICLE

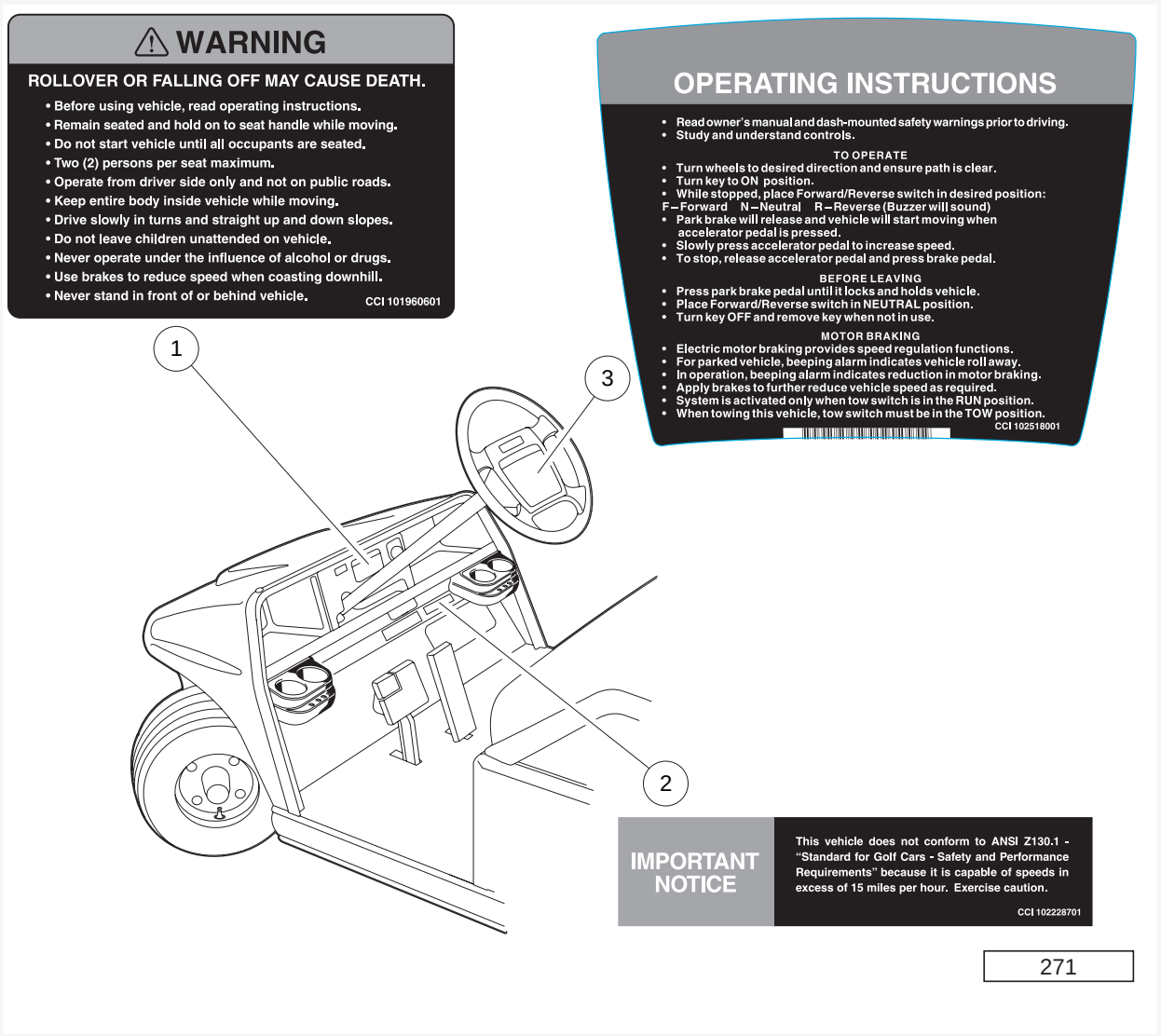

1	101960601	Decal, Rollover Warning (on instrument panel)	11		
2	102228701	Decal, Private Speed Notice (below instrument panel)	12		
3	102518001	Decal, Operating Instructions (on steering wheel)	13		
4			14		
5			15		
6			16		
7			17		
8			18		
9			19		
10			20		

DS ELECTRIC VEHICLE

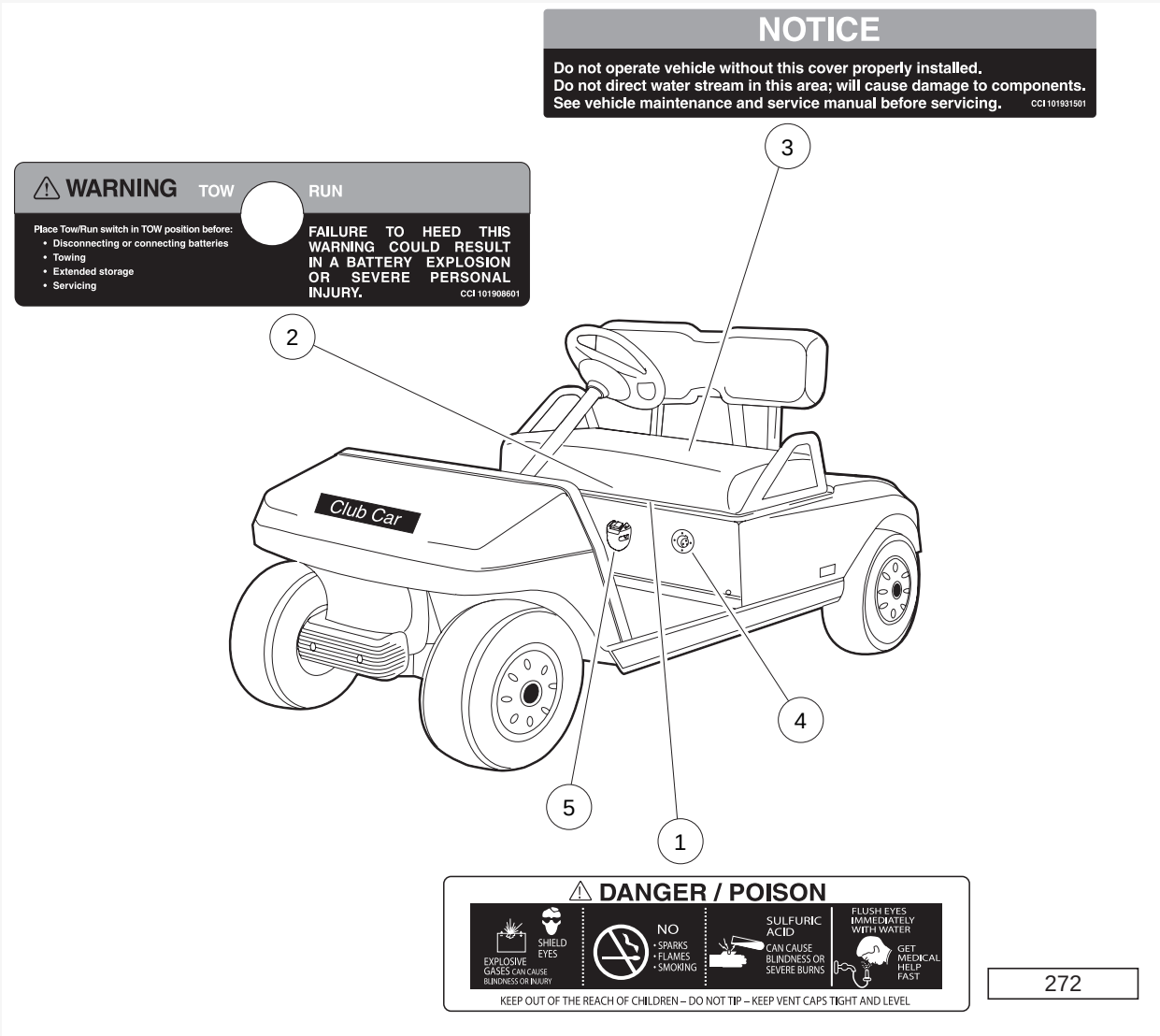

1	1013677	Decal, Battery Danger (on battery caps or on body under seat)	11		
2	101908601	Decal, Tow Switch Warning (on Tow/Run switch plate, under seat)	12		
3	101931501	Decal, Component Cover Notice (on electrical component cover)	13		
4		Battery Charger Receptacle	14		
5		Forward/Reverse Control	15		
6			16		
7			17		
8			18		
9			19		
10			20		

DS GASOLINE VEHICLE

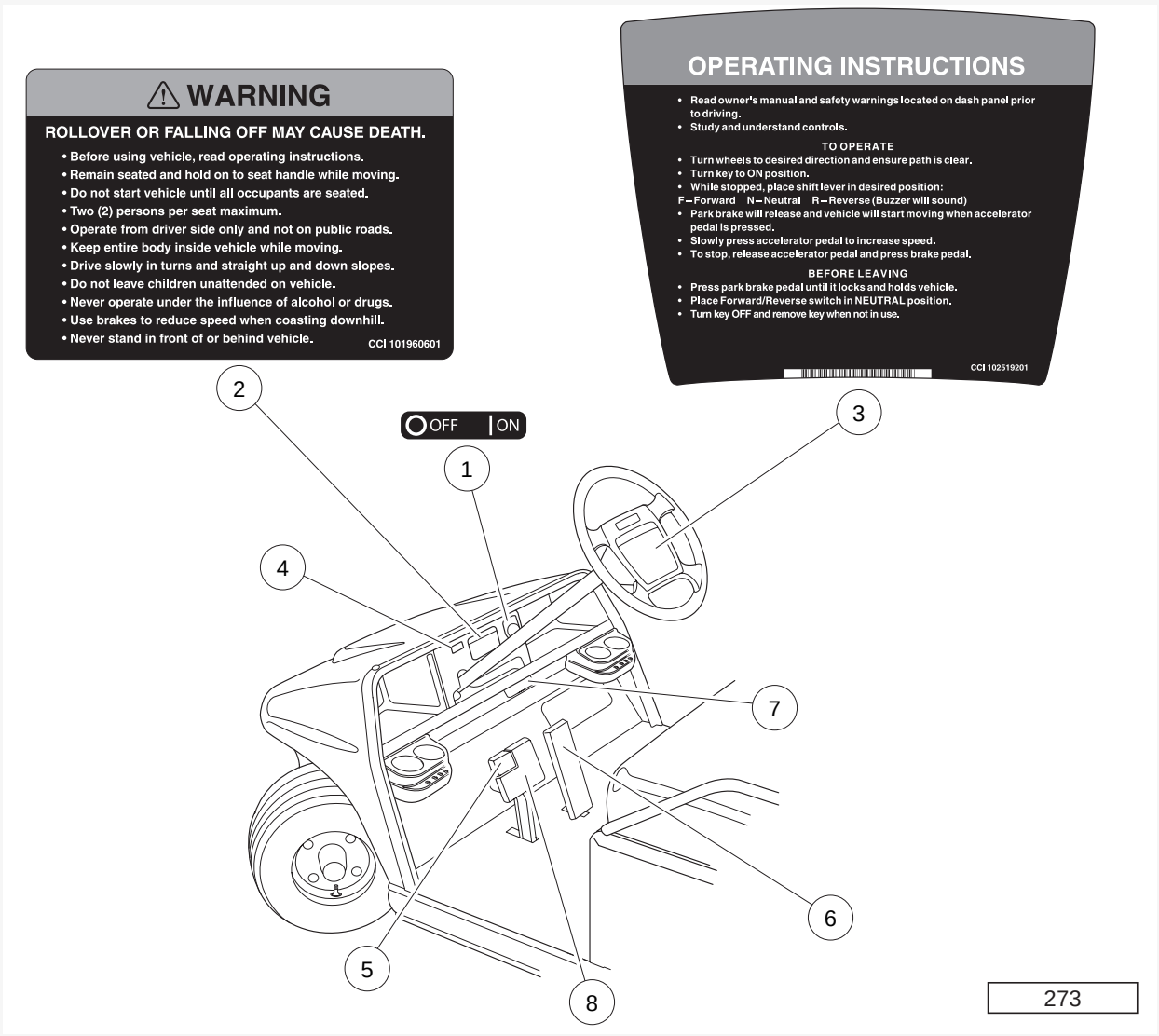

1	101825101	Decal, On/Off Key Switch (above key switch)	11		
2	101960601	Decal, Rollover Warning (on instrument panel)	12		
3	102519201	Decal, Operating Instructions (on steering wheel)	13		
4		Low Oil Warning Light	14		
5		Park Brake Pedal	15		
6		Accelerator Pedal	16		
7		Serial Number	17		
8		Brake Pedal	18		
9			19		
10			20		

DS GASOLINE VEHICLE

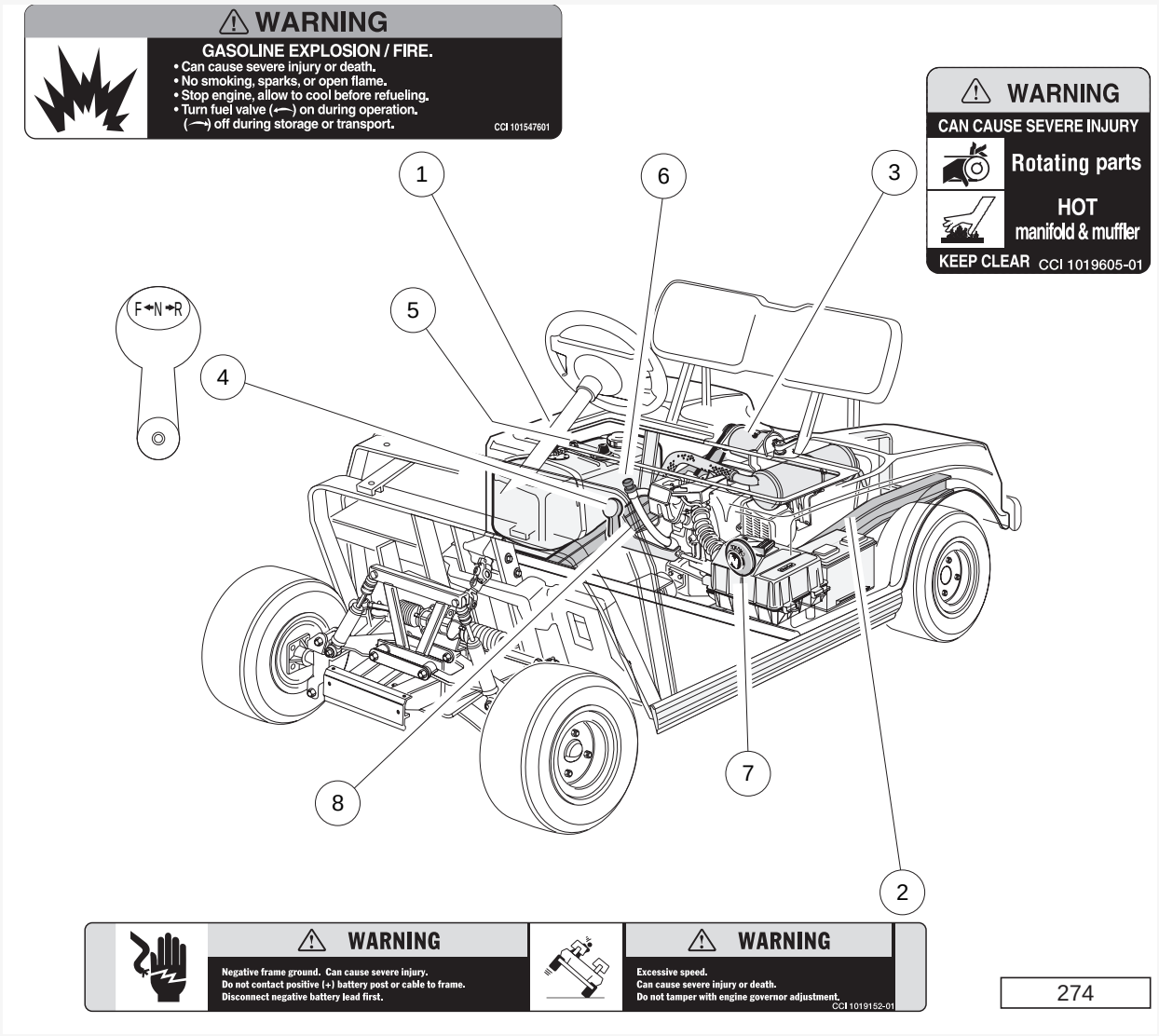

1	101547601	Decal, Gasoline Fuel Warning (at fuel fill or on frame, near fuel tank)	11		
2	101915201	Decal, Frame Ground/Governor Warning (on vehicle frame near battery)	12		
3	101960501	Decal, Rotating Parts/Hot Manifold Warning (on engine, starter/generator, and transaxle)	13		
4		Forward/Reverse Control	14		
5		Fuel Shut-Off Valve	15		
6		Oil Fill	16		
7		Choke	17		
8		Neutral Lockout Cam	18		
9			19		
10			20		

PRACTICE SAFETY

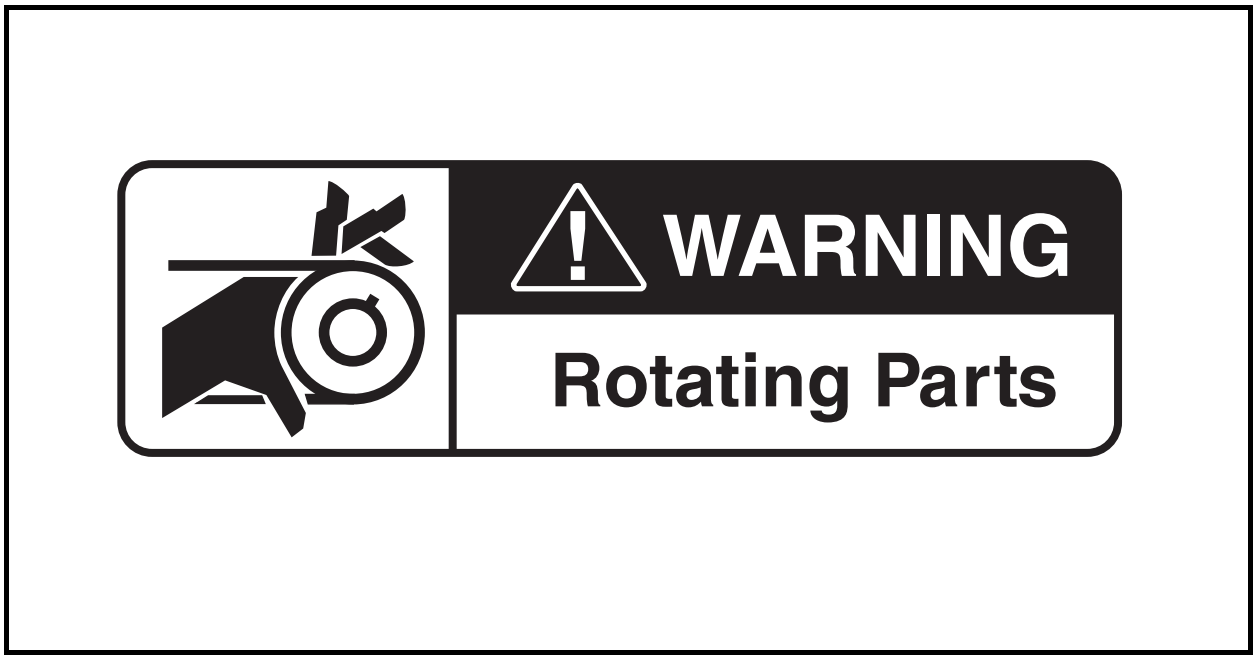

Figure 1 Practice Safety

Safety signs like you see above may at first seem shocking, but their impact is mild compared with the reality of severe personal injury.

Your safety and satisfaction are of the utmost importance to us. That is why before operating the vehicle, we urge you to review the information in this manual. Understand and become familiar with the DANGER, WARNING, and CAUTION statements and procedures it contains, along with the safety decals that are affixed to your vehicle.

Take time to understand the language of safety. It is a language that can save your life.

PROPOSITION 65 – STATE OF CALIFORNIA

⚠ WARNING

- **This product contains or emits chemicals or substances that have been determined by the state of California to cause cancer and birth defects or other reproductive harm.**

SAFETY DETAILS

⚠ WARNING

- **This owner's manual should be read completely before attempting to drive or service the vehicle. Failure to follow the instructions in this manual could result in property damage, severe personal injury, or death.**

It is important to note that some vital statements throughout this manual and on the decals affixed to the vehicle are preceded by the words DANGER, WARNING, or CAUTION. For your protection, we recommend that you take special notice of these safety precautions. Safety precautions are essential and must be followed.

Throughout this manual and on the operation and safety decals affixed to the vehicle, the words "golf car" and "vehicle" are used interchangeably. "Golf car" is defined in the Notice of this manual and no other representation is stated or implied.

If any of the operation or safety decals on the vehicle become damaged, have been removed or cannot be easily read, they should be replaced immediately to avoid possible property damage, personal injury, or death. Contact your distributor/dealer.

⚠ DANGER

- **A DANGER indicates an immediate hazard that will result in severe personal injury or death.**

⚠ WARNING

- **A WARNING indicates an immediate hazard that could result in severe personal injury or death.**

⚠ CAUTION

- **A CAUTION with the safety alert symbol indicates a hazard or unsafe practice that could result in minor personal injury.**

CAUTION

- **A CAUTION without the safety alert symbol indicates a potentially hazardous situation that could result in property damage.**

GENERAL WARNINGS

The following safety statements must be heeded whenever the vehicle is being operated, repaired, or serviced. **See Safety Decal and Feature Identification on page 4.** Other specific safety statements appear throughout this manual and on the vehicle.

⚠ DANGER

- **Battery – Explosive gases! Do not smoke. Keep sparks and flames away from the vehicle and service area. Ventilate when charging or operating vehicle in an enclosed area. Wear a full face shield and rubber gloves when working on or near batteries.**

DANGER CONTINUED ON NEXT PAGE...

⚠ DANGER

- **Gasoline – Flammable! Explosive! Do not smoke. Keep sparks and flames away from the vehicle and service area. Service only in a well-ventilated area.**
- **Do not operate engine in an enclosed area without proper ventilation. The engine produces carbon monoxide, which is an odorless, deadly poison.**
- **The vehicle will not provide protection from lightning, flying objects, or other storm-related hazards. If caught in a storm while driving a Club Car vehicle, exit the vehicle and seek shelter in accordance with applicable safety guidelines for your location.**

⚠ WARNING

- **Follow the procedures exactly as stated in this manual, and heed all DANGER, WARNING, and CAUTION statements in this manual as well as those on the vehicle and battery charger.**
- **Do not leave children unattended on vehicle.**
- **Prior to leaving the vehicle unattended or servicing the vehicle, set the park brake, place the Forward/Reverse handle or switch in the NEUTRAL position, turn the key switch to the OFF position, and remove the key. Chock the wheels when servicing the vehicle.**
- **Improper use of the vehicle or failure to properly maintain it could result in decreased vehicle performance, severe personal injury, or death.**
- **Any modification or change to the vehicle that affects the stability or handling of the vehicle, or increases maximum vehicle speed beyond factory specifications, could result in severe personal injury or death.**
- **Check the vehicle for proper location of all vehicle safety and operation decals and make sure they are in place and are easy to read.**
- **Only trained technicians should service or repair the vehicle or battery charger. Anyone doing even simple repairs or service should have knowledge and experience in electrical and mechanical repair. The appropriate instructions must be used when performing maintenance, service, or accessory installation.**

Gasoline vehicles:

- **To avoid unintentionally starting the vehicle:**
  - **Disconnect battery cables, negative (–) cable first (Figure 1).**
  - **Disconnect the spark plug wire from the spark plug.**
- **Frame ground – Do not allow tools or other metal objects to contact frame when disconnecting battery cables or other electrical wiring. Do not allow a positive wire to touch the vehicle frame, engine, or any other metal component.**

Electric vehicles:

- **Place Tow/Run switch in the TOW position before disconnecting or connecting the batteries. Failure to heed this warning could result in a battery explosion or severe personal injury.**
- **To avoid unintentionally starting the vehicle, disconnect the batteries as shown (Figure 2).**
- **After disconnecting the batteries, wait 90 seconds for the controller capacitors to discharge.**

All vehicles:

- **Wear safety glasses or approved eye protection when servicing the vehicle or battery charger. Wear a full face shield and rubber gloves when working on or near batteries.**
- **Do not wear loose clothing or jewelry such as rings, watches, chains, etc., when servicing the vehicle or battery charger.**

WARNING CONTINUED ON NEXT PAGE...

⚠ WARNING

- **Use insulated tools when working near batteries or electrical connections. Use extreme caution to avoid shorting of components or wiring.**

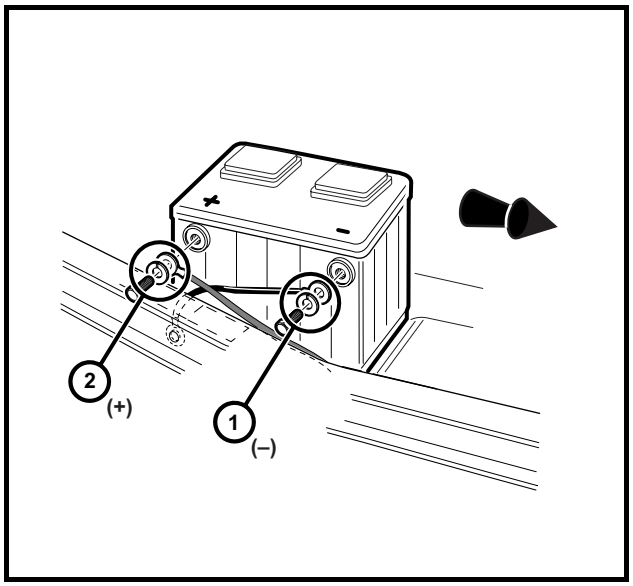

Figure 1 Gasoline Vehicle

(Viewed from passenger side of vehicle)
1. Remove negative battery cable.
2. Remove positive battery cable.
Connect battery cables in reverse order.

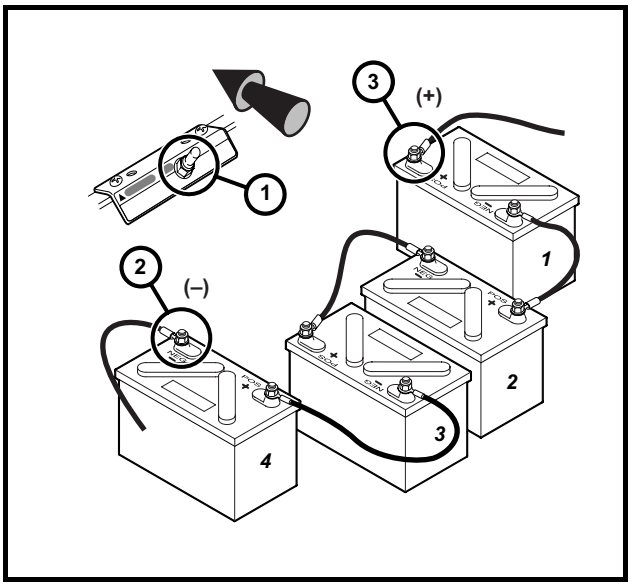

Figure 2 IQ System Electric Vehicle - 12-Volt Battery Configuration

(Viewed from driver side of vehicle)
1. Place TOW/RUN Switch in TOW before disconnecting or connecting battery cables.
2. Remove negative battery cable.
3. Remove positive battery cable.
Connect battery cables in reverse order.

GENERAL INFORMATION

This manual features two DS Golf Car models: the IQ System (48-volt) electric vehicle and the gasoline vehicle. Throughout this manual, important features unique to each model are highlighted. We urge the owner/operator to read and understand this manual, and to pay special attention to the features specific to his/her vehicle(s).

MODEL IDENTIFICATION

The serial number of the vehicle is printed on a bar code decal mounted on the frame directly above the accelerator pedal (Example: AQ0601-123456) **(Figure 3)**. There is also a second serial number decal mounted on the front body frame behind the center dash panel. The center dash panel must be removed to view this decal. **See following NOTE.**

NOTE: *Have the vehicle serial number available when ordering parts or making inquiries.*

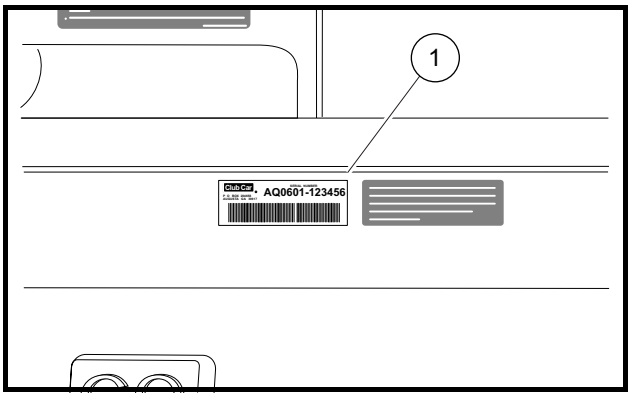

Figure 3 Serial Number Decal

SAFETY COMMITTEE

If the golf car is to be rented or is part of a fleet, we strongly recommend that a safety committee be appointed. One of the main concerns of this committee should be the safe operation of the golf cars.

This should include at a minimum:

- Where golf cars should be driven.
- Ensuring that proper warnings of driving hazards are displayed and visible.
- Who should and who should not drive golf cars.
- Instructing first time drivers.
- Maintaining golf cars in a safe driving condition.
- How various rules are to be enforced.

The safety committee should include all these items and such others as the committee feels necessary or appropriate. Warning signs from Club Car are listed below.

WARNING SIGN	CCI P/N
Sharp Left	S9911211
Sharp Right	S9921211
Steep Hill	S9931211

CONTROLS AND INDICATORS

See General Warnings on page 10.

⚠ WARNING

- **If renting or loaning the vehicle, make sure the driver is familiar with all controls and operating procedures before allowing the vehicle to be driven.**
- **Do not shift the Forward/Reverse handle or switch while the vehicle is moving. To avoid injury to an unsuspecting passenger or damage to the vehicle, always bring the vehicle to a full stop before shifting the Forward/Reverse handle or switch.**
- **Release the accelerator pedal and then press the brake pedal firmly until the vehicle stops. To avoid unintentionally starting or rolling the vehicle, set the park brake, place the Forward/ Reverse handle or switch in the NEUTRAL position, turn the key switch to the OFF position, and remove the key when leaving the vehicle.**
- **Gasoline vehicles only: Do not tamper with the governor. Doing so will void the warranty, as well as damage the engine and other components, and could result in property damage, personal injury, or death due to unsafe speeds.**

KEY SWITCH

The key switch is mounted on the dash to the right of the steering column **(Figure 4)**. It has two positions, OFF and ON, which are clearly labeled. **See following NOTE.**

NOTE: *The key can be removed only when the key switch is in the OFF position.*

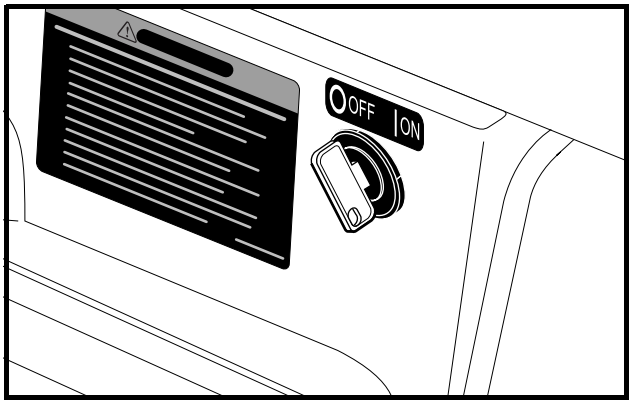

Figure 4 Key Switch

FORWARD/REVERSE CONTROL

IQ System Electric Vehicles

The Forward/Reverse rocker switch is located on the seat support panel, below and to the right of the driver's right knee. The **F** (FORWARD) and **R** (REVERSE) positions are clearly marked. Push down the FORWARD side of the switch to operate the vehicle in the forward direction, or push down the REVERSE side of the switch to operate the vehicle in reverse. When the rocker switch is positioned in the NEUTRAL position, with neither side down, the vehicle will not operate if the accelerator pedal is pressed **(Figure 6)**. The reverse buzzer will sound as a warning when the Forward/Reverse switch is in the REVERSE position.

Gasoline Vehicles

The Forward/Reverse handle is located on the seat support panel, below and to the right of the driver's right knee **(Figure 5)**. The Forward/Reverse handle has three distinct positions: **F** (FORWARD), **R** (REVERSE), and **N** (NEUTRAL). Rotate the handle towards the driver (FORWARD) to operate the vehicle in the forward direction, or towards the passenger (REVERSE) to operate vehicle in reverse. When the handle is in the straight up position (NEUTRAL), the vehicle will not operate. Club Car vehicles operate at reduced speed in reverse. The reverse buzzer will sound as a warning when the Forward/Reverse handle is in the REVERSE position.

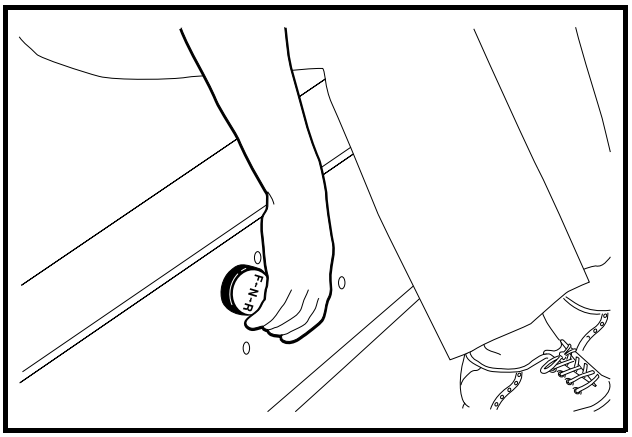

Figure 5 Forward/Reverse Handle

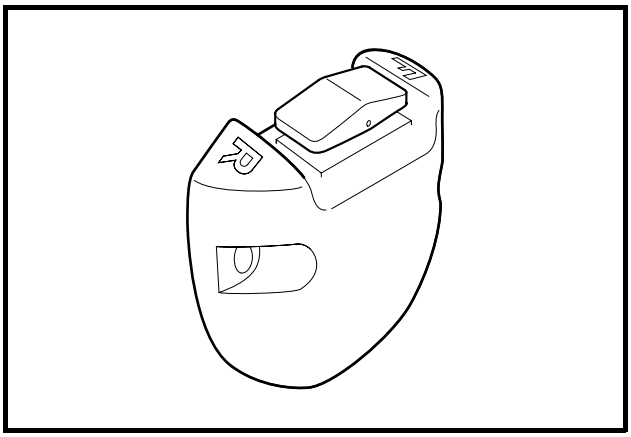

Figure 6 Forward/Reverse Rocker Switch

Figure 7 Accelerator and Brake Pedals

ACCELERATOR PEDAL

The accelerator pedal is the pedal on the right, with the word GO molded into it **(Figure 7)**. The operation of the accelerator pedal differs from that of an automobile. When the key switch is in the ON position, and the Forward/Reverse handle or switch is in either in the FORWARD or REVERSE position, pressing the accelerator pedal will automatically release the park brake and start the vehicle moving in the direction selected (forward or reverse). As the accelerator pedal is pressed, speed will increase until full speed is reached. When the accelerator is released, power will be cut off and the motor or engine will stop running.

IQ System vehicles use a special electrical system, which employs motor braking in some modes of operation. In those modes, the vehicle operates as follows:

- **Zero Speed Detect:** This prevents the vehicle from rolling away uncontrolled should the driver park on a slope and leave the vehicle without locking the park brake. The vehicle will roll at about 1 mph (1.6 km/h). If the zero speed detect function remains engaged for two seconds or more, a warning buzzer will sound to alert the driver that motor braking has been activated. **See following WARNING.**

⚠ WARNING

- **Zero speed detect will not limit vehicle speed to 1 mph (1.6 km/h) on very steep grades. Do not operate vehicle on slopes exceeding 20% grades.**

- **Pedal Down Motor Braking:** This feature helps to control vehicle downhill speed. Motor braking is activated when the vehicle reaches the programmed top speed and holds the vehicle at that speed. Motor braking is automatically disengaged when vehicle speed slows below the programmed top speed.
- **Pedal Up Motor Braking:** When vehicle speed is above 11 mph (17.7 km/h), releasing the accelerator pedal will activate motor braking, which slows the vehicle speed. Once vehicle speed slows to below approximately 11 mph (17.7 km/h), with the accelerator pedal still released, motor braking will be deactivated and the vehicle will coast freely. This feature is selectable. Contact your dealer/distributor to inquire about this selectable feature

BRAKE PEDAL

The brake pedal is the large pedal on the left with the word STOP molded into it **(Figure 7)**. To slow or stop the vehicle, press the brake pedal with your foot **(Figure 8)**.

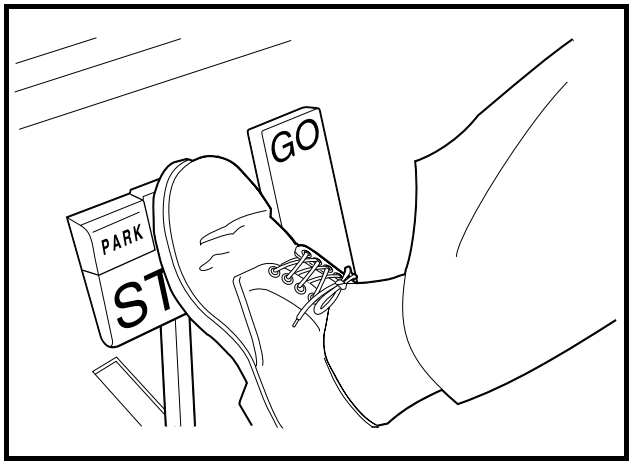

Figure 8 Brake Pedal

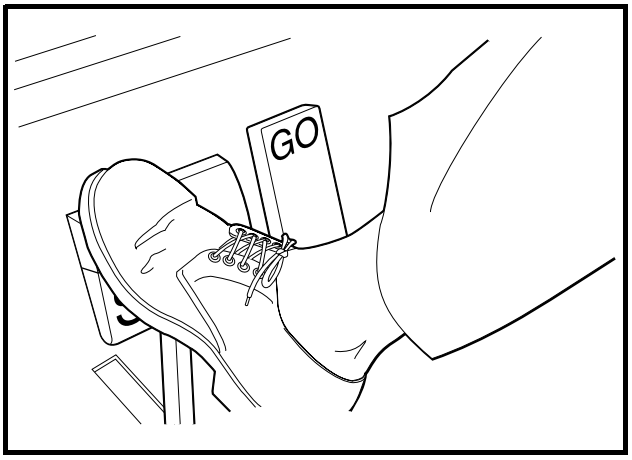

Figure 9 Park Brake Pedal

PARK BRAKE PEDAL

The park brake pedal is the small raised portion in the upper left corner of the brake pedal. It has the word PARK molded into it and the words PARK BRAKE marked on top of it **(Figure 8)**. To set the park brake, press the brake pedal firmly and tilt the park brake portion of the pedal forward with your foot **(Figure 9)**. **See following WARNING.**

⚠ WARNING

- **The park brake will release automatically when either the accelerator or brake pedal is pressed. The park brake has multiple locking positions and should be firmly pressed and locked to prevent the vehicle from rolling.**

BATTERY WARNING LIGHT

IQ System Electric Vehicles Only

IQ System vehicles feature a dash-mounted warning light (above steering column) that, when the vehicle is in operation, indicates low battery voltage or, when the vehicle is being charged, indicates a charging problem. The battery warning light is controlled by the onboard computer.

When the vehicle is in operation, the warning light will illuminate and remain illuminated if:

- Batteries' voltage drops below 48 volts when there is no load on the batteries (the vehicle is stopped and there are no accessories on).
- Batteries have discharged to less than 25% of rated capacity.

If the warning light illuminates when the vehicle is operating, there will be enough power remaining to drive the vehicle for approximately 30 minutes. However, the vehicle should be charged at the first opportunity. If the warning light illuminates and the vehicle is unable to operate for 30 minutes, have your Club Car distributor/dealer check the vehicle for a possible battery or electrical system problem.

When the batteries receive an incomplete charge because 1) the DC power cord is disconnected, 2) AC power to the charger is interrupted, 3) automatic charger shut-off occurs after 16 hours of operation, 4) the charger malfunctions, or 5) the wrong charger is used, the warning light will indicate as follows:

- The warning light will not illuminate if the charge is 90% or more complete. The onboard computer will retain in memory the amount of charge needed to fully replenish the batteries and will complete the charge during the next charge cycle.
- When the charger is unplugged, the warning light will illuminate and remain illuminated for 10 seconds if the charge is less than 90% complete but the vehicle has enough power for approximately 30 minutes of operation. This will alert the operator that the vehicle may be used, but that it must be charged to completion as soon as possible.
- The warning light will repeatedly illuminate for 10 seconds, with 4 second intervals if the charger times out at 16 hours and the batteries are not sufficiently charged. **See the battery charger owner's manual.** This indicates an abnormal charge cycle. The charger and batteries should be checked by your Club Car distributor/dealer.
- The warning light will repeatedly illuminate for 10 seconds, with 4 second intervals during a charge cycle (DC plug is still connected) if AC power to the charger is interrupted. The light will go out when AC power is restored.

LED Light: In addition to the warning light, there is an infrared LED in the dash light assembly, which transmits an infrared signal from the onboard computer (OBC). This signal is received by the optional Communication Display Module (CCI P/N 101831801), which provides information on the condition of the vehicle and batteries.

TOW/RUN SWITCH

IQ System Electric Vehicles Only

⚠ WARNING

- **Place Tow/Run switch in the TOW position before disconnecting or connecting the batteries. Failure to heed this warning could result in a battery explosion or severe personal injury.**
- **When the Tow/Run switch is in the TOW position, all motor braking functions, including zero speed detect, are disabled.**

IQ System vehicles are equipped with a Tow/Run switch, located under the seat just above the Forward/Reverse switch **(Figure 10)**. The switch must be in the RUN position in order to operate the vehicle. When the switch is in the TOW position, power to the vehicle electrical components is turned off and the vehicle will not operate. **See following NOTE.**

NOTE: *After placing the Tow/Run switch in the TOW position, allow 10 seconds to elapse before switching back to the RUN position.*

After placing the Tow/Run switch in the RUN position, allow 10 seconds to elapse before operating the vehicle.

The Tow/Run switch should be placed in the TOW position under the following conditions:

- **Before Towing the Vehicle:** Place the Tow/Run switch in the TOW position to disable all motor braking functions, thus preventing possible damage that could occur to the vehicle or electrical components if the vehicle is towed while the zero speed detect motor braking function is operating.
- **Before Disconnecting or Connecting Battery Cables:** Place the Tow/Run switch in the TOW position to turn off power to the vehicle electrical system, thus preventing severe arcing and possible battery explosion as the battery cables are disconnected.
- **For Long Term Storage:** Place the Tow/Run switch in the TOW position to turn off power to the vehicle electrical system, thus preventing vehicle electrical components from discharging the batteries.

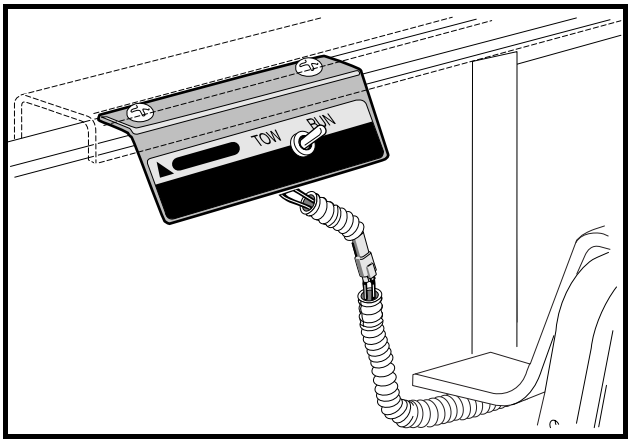

Figure 10 Tow/Run Switch - IQ System

NEUTRAL LOCKOUT

Gasoline Vehicles Only

For the convenience of the trained technician, there is a neutral lockout cam located on the back of the Forward/Reverse shifter. If the neutral lockout cam is pulled out approximately 3/8 inch (10 mm) and then rotated one-half turn until it snaps into place, the cam will be in the MAINTENANCE position **(Figure 11)**. This will allow the technician to operate the engine in neutral for certain maintenance procedures. With the cam in this position, the vehicle will not operate if the Forward/Reverse handle is placed in either the FORWARD or REVERSE position.

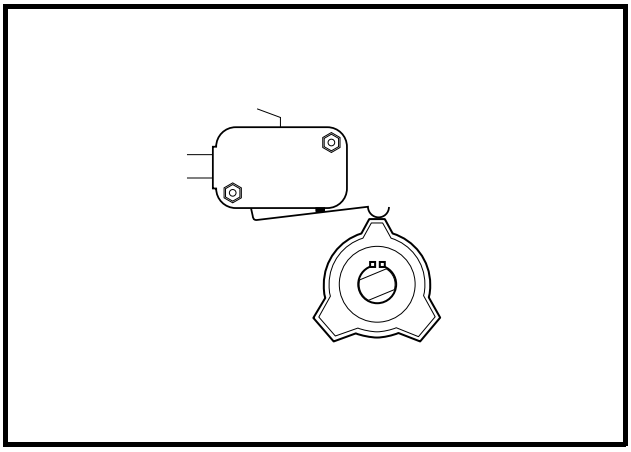

Figure 11 Neutral Lockout – Maintenance

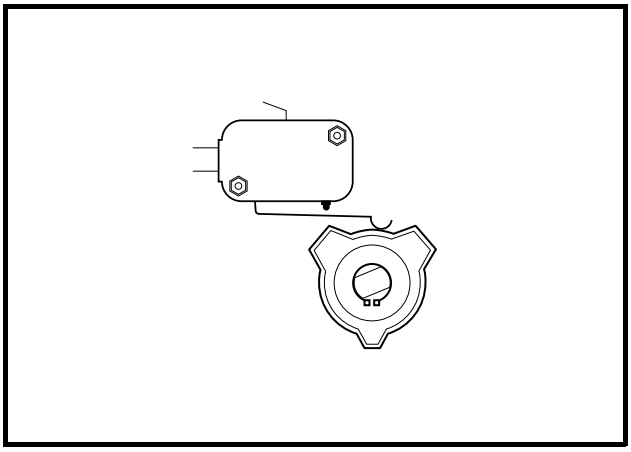

Figure 12 Neutral Lockout – Operate

To put the cam back into the OPERATE position, pull the cam out approximately 3/8 inch (10 mm) and rotate it one-half turn until it snaps into place **(Figure 12). See following WARNING and NOTE.**

⚠ WARNING

- **With the cam in the MAINTENANCE position and the engine running, the vehicle may move suddenly if the Forward/Reverse handle is shifted or accidentally bumped. To prevent this, chock the front and rear wheels and firmly set the park brake before servicing or leaving the vehicle.**

NOTE: *Be sure to return the cam to the OPERATE position after servicing the vehicle, or it will not operate with the Forward/Reverse handle in either the FORWARD or REVERSE position.*

CHOKE

Gasoline Vehicles Only

The choke is located on the seat support panel below and to the left of the driver's left knee **(Figure 13)**. If the vehicle is hard to start in cool or cold temperatures, simply push in the choke cover to activate it. Hold it during start up and release the choke cover after the engine starts and runs smoothly.

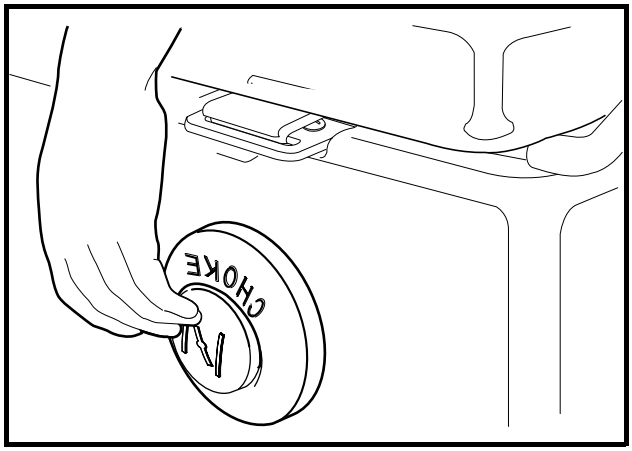

Figure 13 Choke

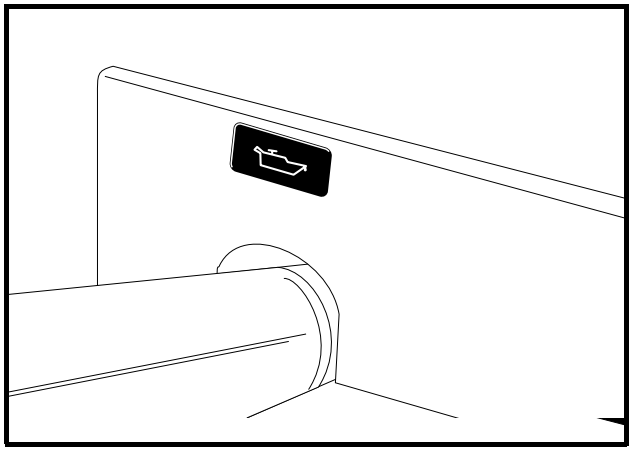

Figure 14 Low Oil Warning Light

LOW OIL WARNING LIGHT

Gasoline Vehicles Only

The gasoline golf car is equipped with a low oil warning light, located on the dash panel just above the steering column **(Figure 14)**. If the warning light comes on, oil should be checked and added to the engine as necessary before continuing to use the vehicle. The vehicle should never be driven with the low oil warning light remaining on. If the warning light goes on and off, you may proceed, but oil should be added at the first opportunity. If the oil level is correct and the warning light stays on, have a trained technician check the vehicle. **See following CAUTION.**

CAUTION

- **Failure to add oil immediately when the low oil warning light stays on may result in permanent engine damage.**

PRE-OPERATION AND DAILY SAFETY CHECKLIST

Each Club Car vehicle has been thoroughly inspected and adjusted at the factory; however, upon receiving your new vehicle(s), you should become familiar with its controls, indicators, and operation. Carefully inspect each vehicle to ensure that it is in proper working condition before accepting delivery.

Use the following checklist as a guide to inspect the vehicle. This checklist should be used daily to ensure that the vehicle is in proper working condition and in conjunction with the Periodic Service Schedules on page 30. Any problems should be corrected by a Club Car distributor/dealer or a trained technician.

- **General:** All the parts should be in place and properly installed. Be sure that all nuts, bolts, and screws are tight. On gasoline vehicles check all hose clamps for tight fit as well as the starter belt for tightness.
- **Safety and information decals:** Check to ensure that all safety and information decals are in place. **See Safety Decal and Feature Identification on page 4.**
- **Tires:** Check for proper tire pressure. Visually inspect tires for wear, damage, and proper inflation on a daily basis. **See Vehicle Specifications on page 47.**
- **Battery(ies):** Check electrolyte to ensure that it is at its proper level **(Figure 20, Page 36 or Figure 25, Page 41)**. Check battery posts. Wires should be tight and free of corrosion. On electric vehicles charge batteries fully before first use of vehicle.

- **Charger cord, plug, and receptacle (electric vehicles):** Visually inspect for cracks, loose connections, and frayed wiring. **See Plug and Receptacle on page 39.**
- **Engine (gasoline vehicles):** Check for proper engine oil level. **See Engine Oil – Gasoline Vehicles on page 42.**
- **Fuel (gasoline vehicles):** Check fuel level. **See Fueling Instructions – Gasoline Vehicles on page 45.** Check fuel tank, lines, cap, pump, fuel filters, and carburetor for fuel leakage.
- **Exhaust system (gasoline vehicles):** Check for leaks.

⚠ WARNING

- **Be sure the plastic has been removed from the seat bottom before operating the vehicle. Failure to do so may result in a fire, property damage, personal injury, or death.**

PERFORMANCE INSPECTION

After you have familiarized yourself with the vehicle controls and have read and understood the driving instructions, take the vehicle for a test drive.

Use the following checklist as a guide to inspect the vehicle and check daily for proper operation. Any problems should be corrected by a Club Car distributor/dealer or a trained technician.

All Vehicles

- **Forward/Reverse control:** Check for proper operation. **See Controls and Indicators on page 14.**
- **Brakes:** Be sure the brakes function properly. When brake pedal is fully pressed under moderate pressure, it should not go more than halfway to the floor, and vehicle should come to a smooth, straight stop within 14 feet (4.3 m). If the pedal goes more than halfway to the floor, or if the vehicle swerves or fails to stop within 14 feet (4.3 m), have the brake system checked and adjusted as required. Brake adjustment must be maintained so that the brake pedal cannot be pressed to the floor under any circumstance.
- **Park brake:** When latched, the park brake should lock the wheels and hold the vehicle stationary (on an incline of 20% or less). It should release when either the accelerator or brake pedal is pressed.
- **Reverse buzzer:** The reverse buzzer should sound as a warning when the Forward/Reverse handle or switch is in the REVERSE position.
- **Steering:** The vehicle should be easy to steer and should not have any play in the steering wheel.
- **General:** Listen for any unusual noises such as squeaks or rattles. Check the vehicle's ride and performance. Have a Club Car distributor/dealer or a trained technician investigate anything unusual.

Electric Vehicles

- **Accelerator:** With the key switch in the ON position and the Forward/Reverse switch in the FORWARD position, as the accelerator pedal is pressed, the motor should start and the vehicle should accelerate smoothly to full speed. When the pedal is released it should return to the original position and the motor should rotate freely or go into motor braking mode. **See Pedal Up Motor Braking below.** All Club Car vehicles operate at reduced speed in reverse.
- **Zero Speed Detect:** With the vehicle parked on level ground and the park brake disengaged, place the Tow/Run switch in the RUN position and attempt to push the vehicle. Motor braking should engage and cause resistance to rolling (moving at no more than 1 to 3 mph) (1.5 to 4.8 km/h) with the Forward/Reverse switch in any position. When zero speed detect motor braking is engaged, the reverse buzzer should emit a distinct pattern of beeps. **See following WARNING.**

⚠ WARNING

- **Zero-speed detect will not limit vehicle speed to 1 mph (1.6 km/h) on very steep grades. Do not operate vehicle on slopes exceeding 20% grades.**

- **Pedal Up Motor Braking (adjustable on IQ System vehicles):** Accelerate the vehicle to full speed and then release the accelerator pedal. Motor braking should quickly and smoothly slow the vehicle to approximately 11 mph (17.7 km/h). Motor braking will disengage when vehicle slows to 11 mph (17.7 km/h). This feature is adjustable for IQ System vehicles only. Contact your local Club Car dealer/distributor to inquire about this adjustable feature.
- **Pedal Down Motor Braking:** Accelerate down an incline with the accelerator pedal pressed. When the vehicle reaches maximum designed speed, motor braking should engage and limit the vehicle to its maximum designed speed. On very steep grades, the vehicle may slightly exceed its maximum designed speed, requiring use of the brake pedal.

Gasoline Vehicles

- **Accelerator:** With the key switch in the ON position and the Forward/Reverse switch in the FORWARD position, as the accelerator pedal is pressed, the engine should start and the vehicle should accelerate smoothly to full speed. When the pedal is released it should return to the original position and the engine should stop. All Club Car vehicles operate at reduced speed in reverse.
- **Governor:** Check maximum speed of the vehicle. The vehicle should operate at 12-15 mph (19-24 km/h) on a level surface.

DRIVING INSTRUCTIONS

⚠ WARNING

- **Only licensed drivers should be allowed to drive the vehicle.**
- **If renting or loaning the vehicle, make sure the driver is familiar with all controls and operating procedures before allowing the vehicle to be driven.**
- **No more than two people should be on the vehicle at one time.**
- **The vehicle is not specially equipped for handicapped persons:**
  - **Be sure all persons can properly operate the vehicle prior to allowing them to drive the vehicle.**
  - **Be sure all passengers are capable of securing themselves in a vehicle before allowing them to ride in one.**
- **For night use, the vehicle must be equipped with headlights, taillights and reflectors.**
- **Stop the vehicle before shifting the Forward/Reverse handle. Failure to do so may result in injury to an unsuspecting passenger and (or) damage to the vehicle.**
- **To help avoid being struck, do not stand in front of or behind the vehicle.**
- **Operate the vehicle from the driver seat only.**
- **To help prevent falls from the vehicle, remain seated in a moving vehicle and hold on to hand holds or handrails at all times. Driver should keep both hands on the steering wheel when the vehicle is in motion.**
- **To help prevent the possibility of serious injury, keep your entire body inside the vehicle.**

WARNING CONTINUED ON NEXT PAGE...

⚠ WARNING

- **Do not leave children unattended on vehicle.**
- **To help prevent overturning the vehicle, drive slowly straight up and down slopes. Avoid driving the vehicle on slopes exceeding 20% incline.**
- **To help avoid possible injury to an inattentive passenger and (or) damage to the vehicle, avoid sudden starts, sudden stops, and abrupt turns.**
- **To help avoid the possibility of losing control of or overturning the vehicle, reduce speed for adverse driving conditions such as wet grass or rough terrain.**
- **Do not use the vehicle on public roads. It is not designed or intended for street use and should not be licensed for use on public roads.**
- **Obey all local rules concerning golf cars.**
- **The vehicle should be driven in only specified areas by trained drivers.**
- **Do not drive while under the influence of alcohol, drugs, or medications.**
- **To prevent overturning the vehicle, drive slowly in turns.**
- **Use brakes to reduce speed when coasting downhill.**

No one should drive the vehicle without first being instructed in the proper operation and use of the vehicle's controls. An experienced operator should accompany each first-time driver on a test drive before allowing him/her to operate the vehicle alone.

To ensure safe operation of the vehicle, follow exactly and in order, all of the following procedures. Read and understand all instructions prior to driving the vehicle.

STARTING THE VEHICLE

1. Study and understand controls.
2. Make sure everyone is seated and holding onto seat hand holds or handrails.
3. Read safety warnings located on dash and (or) above pedals.
4. Make sure wheels are turned in desired direction.
5. Turn the key to the ON position and make sure nothing is in your path.
6. Select direction by placing the Forward/Reverse handle or switch in desired position (F = forward or R = reverse). A buzzer will sound as a warning when the Forward/Reverse handle or switch is in the REVERSE position.
7. Slowly press accelerator pedal. The park brake will release automatically and the vehicle will start to move. As the accelerator pedal is pressed, speed will increase until full speed is reached. **See following WARNING and NOTE.**

⚠ WARNING

- **Operator must control vehicle speed when going downhill.**
- **Electric vehicles only: Pedal down or pedal up motor braking may be used to help control speed when going downhill; however, steep terrain or other conditions may require that pedal braking be used in conjunction with motor braking.**

Gasoline vehicles only:

- **Do not shift the vehicle out of forward while going downhill. If you do, you will not be able to shift into reverse or back into forward until stopped.**
- **Press the brake pedal as necessary and partially press the accelerator when descending a hill. With the accelerator pedal partially pressed, the governor will cause the engine to assist the brakes in controlling downhill speed.**

NOTE: *If the Forward/Reverse handle is shifted into the NEUTRAL position, power will be cut off and the engine will stop running.*

STOPPING THE VEHICLE

⚠ WARNING

- **Driving through water may affect the brakes. After driving through water, check effectiveness of the brakes by gently pressing the brake pedal. If the vehicle does not slow down at the normal rate, continue to press the brake pedal until the brakes dry out and normal performance returns.**

⚠ CAUTION

- **When stopped on a hill, use the brake pedal to hold your position. Do not use the accelerator pedal to hold position.**

To stop the vehicle, release the accelerator pedal and press the brake pedal with your right foot until the vehicle comes to a complete stop.

PARKING AND LEAVING THE VEHICLE

1. After stopping the vehicle, firmly press the park brake pedal until it locks. This will prevent the vehicle from rolling.
2. Turn the key switch to the OFF position and place the Forward/Reverse handle or switch in the NEUTRAL position. Remove the key when the vehicle is not in use.

- **Electric vehicles only:** When the Tow/Run switch is in the RUN position (with the Forward/Reverse switch or key switch in any position), the “zero speed detect” function will prevent the vehicle from rolling at more than 1 to 3 mph (1.5 to 4.8 km/h) unless the accelerator is pressed. This prevents the possibility of a parked vehicle (with the park brake disengaged) rolling away too fast to be overtaken on foot.
- **Gasoline vehicles only:** Turn the fuel shut-off valve to the closed (OFF) position when the vehicle is not in use.

TOWING

⚠ WARNING

- **Do not tow the vehicle on public streets or highways.**
- **Use only approved Club Car tow bars.**
- **Turn the key switch to the OFF position and place the Forward/Reverse handle or switch in the NEUTRAL position before towing the vehicle.**
- **Extreme caution should be used when towing any vehicle.**
- **Do not exceed 5 mph (8 km/h) towing speed.**
- **Do not allow people in the vehicles being towed.**
- **Avoid sudden starts, sudden stops, and tight turns when towing.**

WARNING CONTINUED ON NEXT PAGE...

⚠ WARNING

- **Avoid stopping on a hill when towing. If you must stop on a hill, avoid sudden starts or rolling backwards and stopping suddenly. Failure to heed this warning could cause the vehicle to overturn, possibly resulting in severe personal injury.**
- **Do not tow more than one Club Car vehicle with another Club Car vehicle. If more than one vehicle must be towed, an adequately powered vehicle (tractor or full sized truck) properly fitted, with a tow hitch height of 11 inches (28 cm) should be used. Only heavy-duty tow bars should be used for multi-vehicle towing. Never tow more than five vehicles at one time.**
- **Electric vehicles only: Place the Tow/Run switch in TOW position; otherwise, the vehicle will not roll while being towed.**
- **Gasoline vehicles only: Turn the fuel shut-off valve to the closed (OFF) position (Figure 15, Page 28).**

All vehicles are equipped with both front and rear tow bar attaching points. A light duty tow bar is available for break-down towing and single vehicle towing. A heavy duty tow bar and an onboard tow bar are available for multi-vehicle towing. Observe all of the previous WARNING statements when towing.

TRANSPORTING ON A TRAILER

⚠ WARNING

- **For use on public roads, the trailer must meet all federal, state, and local requirements such as taillights, brake lights, etc.**
- **Do not tow a Club Car vehicle behind a passenger vehicle or truck on a public road unless it is on an approved trailer.**
- **The vehicle to be towed should be tied securely to the trailer, with the Forward/Reverse handle or switch in the NEUTRAL position, the key switch in the OFF position, and the park brake firmly pressed and locked.**
- **Do not allow people in the trailer or vehicle being towed.**
- **Avoid sudden starts, sudden stops, and tight turns when towing.**
- **Avoid stopping on a hill when towing. If you must stop on a hill, avoid sudden starts or rolling backwards and stopping suddenly. Failure to heed this warning could cause the vehicle to overturn, possibly resulting in severe personal injury.**
- **When towing on a trailer, normal road speed of the tow vehicle should be reduced.**
- **Because of the added length of the trailer, use caution when making turns.**
- **Remove the vehicle windshield and secure the seat bottom before transporting on a trailer.**
- **Gasoline vehicles only: Turn the fuel shut-off valve to the closed (OFF) position (Figure 15, Page 28).**

If the vehicle must be transported over long distances or on public highways, it should be transported on an approved trailer that has the approved load rating of 1200 lb. (544 kg) per vehicle being transported.

NOTE: *A two-car trailer should be rated at 2 x 1200 = 2400 lb. (2 x 544 = 1088 kg).*

STORAGE – ELECTRIC VEHICLES

See General Warnings on page 10.

⚠ WARNING

- **Turn the key switch to the OFF position, remove the key, and leave the Forward/Reverse handle or switch in the NEUTRAL position during storage. This is to prevent unintentionally starting the vehicle or a fire hazard. Place Tow/Run switch in the TOW position.**
- **Do not attempt to charge frozen batteries or batteries with bulged cases. Discard the battery. Frozen batteries can explode.**

⚠ CAUTION

- **Batteries in a low state of charge will freeze at low temperatures.**
- **To avoid exposing electrical components to moisture and subsequent damage, do not use any type of pressure washing or steam cleaning equipment to wash the vehicle.**

PREPARING THE ELECTRIC VEHICLE FOR EXTENDED STORAGE

1. Fully charge batteries. **See Charging Batteries on page 38.**
2. Batteries should be clean and free of corrosion. Wash tops and terminals of batteries with a solution of baking soda and water (1 cup (237 mL) baking soda per 1 gallon (3.8 L) of water). Rinse solution off batteries. Do not allow this solution to enter the batteries. Be sure terminals are tight. Let the terminals dry and then coat them with Battery Terminal Protector Spray (CCI P/N 1014305).
3. Store vehicle in a cool, dry place. This will minimize battery self-discharge.
4. Adjust tires to recommended tire pressure. **See Vehicle Specifications on page 47.**
5. Perform semiannual periodic lubrication. **See Periodic Lubrication Schedules on page 33.**
6. Thoroughly clean front body, rear body, seats, battery compartment, and underside of vehicle.
7. Do not engage the park brake. Chock the wheels to prevent the vehicle from rolling.
8. Keep batteries fully charged during storage.

- Leave battery chargers plugged in during storage. The onboard computer will automatically activate the charger when necessary. If charger cannot remain plugged in, or AC power will not be available during extended storage, disconnect the batteries for storage **(Figure 2, Page 12)**.

CAUTION

- **Be sure to check the batteries and charger monthly to maintain correct battery water level, and to ensure the charger is operating correctly during storage.**

RETURNING THE STORED ELECTRIC VEHICLE TO SERVICE

1. If necessary, connect batteries and tighten terminals to 110 in-lb (16.5 N·m).
2. Fully charge batteries.
3. Adjust tires to recommended tire pressure. **See Vehicle Specifications on page 47.**
4. Perform the Pre-Operation and Daily Safety Checklist on page 20.

STORAGE – GASOLINE VEHICLES

See General Warnings on page 10.

⚠ DANGER

- **Do not attempt to drain fuel when the engine is hot or while it is running.**
- **Be sure to clean up any spilled gasoline before operating the vehicle.**
- **Store fuel in an approved fuel container only. Store in a well-ventilated area away from sparks, open flames, heaters, or heat sources.**
- **Keep fuel out of the reach of children.**
- **Do not siphon fuel from the vehicle.**

⚠ WARNING

- **Turn the key switch to the OFF position, remove the key, and leave the Forward/Reverse handle in the NEUTRAL position during storage. This is to prevent unintentionally starting the vehicle or a fire hazard.**
- **Turn the fuel shut-off valve to the closed (OFF) position (Figure 15).**

⚠ CAUTION

- **Batteries in a low state of charge will freeze at low temperatures.**

PREPARING THE GASOLINE VEHICLE FOR EXTENDED STORAGE

1. Store vehicle in a cool, dry place. This will minimize battery self-discharge. If the battery appears to be weak, have it charged by a trained technician. Use an automotive-type 12-volt battery charger rated at 10 amps or less.
2. Drain carburetor and seal the fuel tank.
   - 2.1. Place the Forward/Reverse handle in the NEUTRAL position and the neutral lockout cam in the MAINTENANCE position. Turn the fuel shut-off valve to the closed (OFF) position **(Figure 15)** and run the engine until fuel remaining in the carburetor and fuel lines is depleted and the engine stalls. Return the neutral lockout cam to the OPERATE position.
   - 2.2. Loosen, but do not remove, the carburetor drain screw and drain fuel remaining in bowl into a small, clean container, then pour the fuel from the container into vehicle fuel tank. Tighten the carburetor drain screw.
   - 2.3. Disconnect fuel vent line from fuel tank vent nipple.
   - 2.4. Plug the fuel tank vent nipple so that it is air tight. We recommend using a slip-on vinyl cap.
3. Disconnect the battery cables, negative (–) cable first.

4. Batteries should be clean and free of corrosion. Wash tops and terminals of batteries with a solution of baking soda and water (1 cup (237 mL) baking soda per 1 gallon (3.8 L) of water). Rinse solution off batteries. Do not allow this solution to enter the batteries. Be sure terminals are tight. Let the terminals dry and then coat them with Battery Terminal Protector Spray (CCI P/N 1014305).

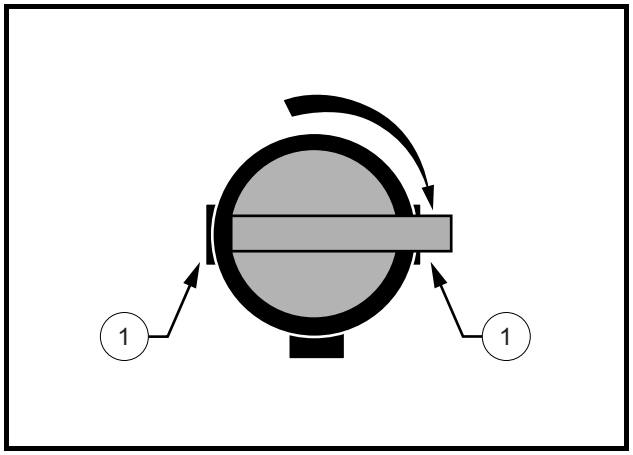

Figure 15 Fuel Shut-off Valve – Closed Position

Viewed From Selector Side of Valve
1. Closed (OFF) Position
Selector Is Aligned with OFF Markings On the Sides of Valve

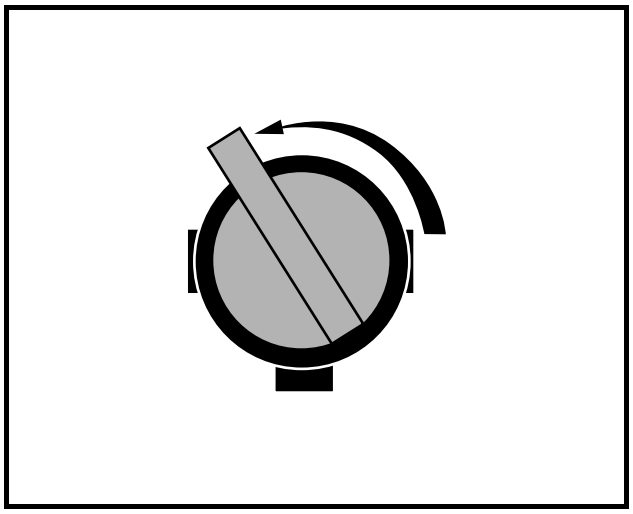

Figure 16 Fuel Shut-off Valve – Open Position

Viewed From Selector Side of Valve
Full Open (ON) Position

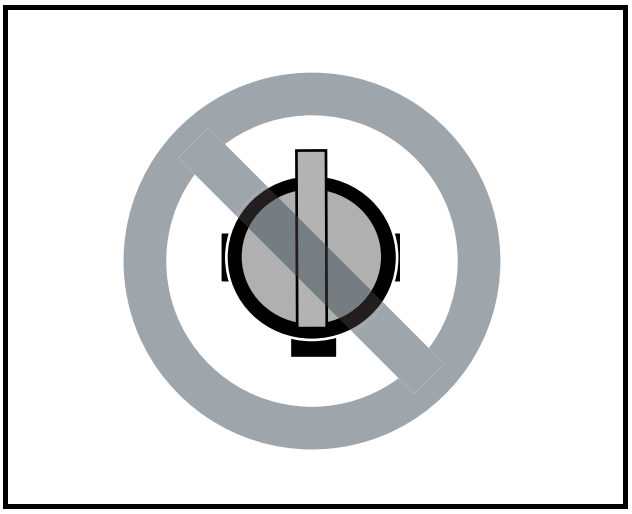

Figure 17 Fuel Shut-off Valve – Partially Closed Position

Viewed From Selector Side of Valve
Partially Closed Position

5. To protect the engine, remove spark plug and pour 1/2 ounce (14.2 mL) of SAE 10 weight oil into the engine through the spark plug hole. Rotate engine crankshaft by hand several times and then install the spark plug.
6. Adjust tires to recommended tire pressure. **See Vehicle Specifications on page 47.**
7. Perform semiannual periodic lubrication. **See Periodic Lubrication Schedules on page 33.**

8. Thoroughly clean front body, rear body, seats, engine compartment, and underside of vehicle.
9. Do not engage the park brake. Chock the wheels to prevent the vehicle from rolling.

RETURNING THE STORED GASOLINE VEHICLE TO SERVICE

1. Restore fuel system to operation **(Figure 31, Page 46)**.
   1.1. Remove plug from fuel tank vent.
   1.2. Connect vent tube to fuel tank vent.
2. Connect battery cables, positive (+) cable first, and tighten terminals to 12 ft-lb (16 N·m).
3. Completely open the fuel shut-off valve **(Figure 16)**. Make sure the valve is fully open. A partially closed fuel shut-off valve **(Figure 17)** combined with the use of the choke can result in a fouled spark plug and engine failure.
4. Place the Forward/Reverse handle in the NEUTRAL position and the neutral lockout cam in the MAINTENANCE position. Crank the engine until fuel is pumped into the carburetor and fuel lines and the engine starts. Turn the engine off and return the neutral lockout cam to the OPERATE position. **See following NOTE.**

NOTE: *Due to the oil added to the engine in preparation for storage, engine may smoke excessively for a short time when it is run for the first time after storage.*

5. Adjust tires to recommended tire pressure. **See Vehicle Specifications on page 47.**
6. Perform the Pre-Operation and Daily Safety Checklist on page 20.

MAINTENANCE

See General Warnings on page 10.

To ensure trouble-free vehicle performance, it is very important to follow an established preventive maintenance program. Regular and consistent vehicle maintenance can prevent vehicle downtime and expensive repairs that can result from neglect. Use the Pre-Operation and Daily Safety Checklist on page 20 and the following Periodic Service Schedules and Periodic Lubrication Schedules to keep the vehicle in proper working condition.

Any vehicle not functioning correctly should be removed from use until it is properly repaired. This will prevent further damage to the vehicle and avoid the possibility of injury due to unsafe conditions.

Contact your local Club Car distributor/dealer to perform all repairs and semiannual and annual periodic service.

⚠ WARNING

- **If any problems are found during scheduled inspection or service, do not operate the vehicle until repairs are made. Failure to make necessary repairs could result in fire, property damage, severe personal injury, or death.**
- **Hot! Do not attempt to service hot engine, motor, resistors, or exhaust system. Attempting to do so could cause severe burns.**

Gasoline vehicles only:

- **Moving parts: Do not attempt to service gasoline vehicle while the engine is running.**
- **Turn the fuel shut-off valve to the closed (OFF) position (Figure 15, Page 28).**

WARNING CONTINUED ON NEXT PAGE...

⚠ WARNING

- **To avoid unintentionally starting the vehicle, before servicing always disconnect the battery, negative (–) cable first (Figure 1, Page 12) and disconnect the spark plug wire from the spark plug.**
- **Frame ground – Do not allow tools or other metal objects to contact frame when disconnecting batteries or other electrical wiring. Never allow a positive wire to touch the vehicle frame, engine, or other metal component.**

PERIODIC SERVICE SCHEDULES

See General Warnings on page 10.

⚠ WARNING

- **Service, repairs, and adjustments must be made per instructions in the maintenance and service manual.**

NOTE: *If the vehicle is constantly subjected to heavy use or severe operating conditions, the preventive maintenance procedure should be performed more often than recommended in the periodic service and lubrication schedules.*

Both the Periodic Service Schedule and Periodic Lubrication Schedule must be followed to keep vehicle in optimum operating condition.

PERIODIC SERVICE SCHEDULE – ELECTRIC VEHICLES

REGULAR INTERVAL	SERVICE	
Daily service by owner	Pre-Operation and Daily Safety Checklist	**See Pre-Operation and Daily Safety Checklist on page 20.**
	Performance Inspection	**See Performance Inspection on page 21.**
	Batteries	Charge batteries (after each daily use only).
Weekly service by owner	Batteries	Check electrolyte level. Add water if necessary. **See page 36.**
Monthly service by owner or trained technician	Batteries	Wash battery tops and clean terminals with baking soda/water solution.
	Tires	Check air pressure and adjust if necessary. **See Vehicle Specifications on page 47.**
	General vehicle	Wash battery compartment and underside of vehicle.
Semiannual service by trained technician only (every 50 hours of operation or 100 rounds of golf)	Brake system	Check brake shoes; replace if necessary. **See Section 6 – Wheel Brake Assemblies in the appropriate maintenance and service manual.**
		Lubricate brake slides per Lubrication Schedule. **See Section 6 – Wheel Brake Assemblies in the appropriate maintenance and service manual.**
		Check brake cables for damage; replace if necessary.
	Electrical wiring and connections	Check for tightness and damage.
	Forward/Reverse switch	Check condition of contacts and wire connections. Make sure connections are tight.
	Front wheel alignment and camber	Check and adjust as required. **See Section 7 – Steering and Front Suspension in the appropriate maintenance and service manual.**
	Motor controller output regulator (MCOR)	Check for loose hardware, cracks and other damage.
Annual service by trained technician only (every 100 hours of operation or 200 rounds of golf)	Batteries	If batteries are not performing as expected, see Section 13 – Batteries in the appropriate maintenance and service supplement.

PERIODIC SERVICE SCHEDULE – GASOLINE VEHICLES

REGULAR INTERVAL	SERVICE	
Daily service by owner	Pre-Operation and Daily Safety Checklist	**See Pre-Operation and Daily Safety Checklist on page 20.**
	Performance Inspection	**See Performance Inspection on page 21.**
Monthly service by owner or trained technician	Engine	Check engine oil level; change if necessary. **See Periodic Lubrication Schedules on page 33.**
		Check engine cooling air intake; clean if necessary. Visually inspect the unshrouded area around engine exhaust for grass and debris, and clean if necessary.
	Tires	Check air pressure and adjust as necessary. **See Vehicle Specifications on page 47.**
	General vehicle	Wash engine compartment and underside of vehicle. Do not wash engine when hot.
Semiannual service by trained technician only (every 50 hours of operation or every 100 rounds for golf cars)	Battery	Clean terminals and wash dirt from casing; check electrolyte level. **See Battery – Gasoline Vehicles on page 40.**
	Front wheel alignment and camber	Check and adjust if necessary. **See Section 7 – Steering and Front Suspension in the appropriate maintenance and service manual.**
	Electrical wiring and connections	Check for tightness and damage.
	Brake system	Check brake shoes; replace if necessary.
		Lubricate brake slides. **See Periodic Lubrication Schedules on page 33.**
		Check brake cables for damage; replace if necessary.
Annual service by trained technician only (every 100 hours of operation or every 200 rounds for golf cars)	Engine	Check for leaks around gaskets, fill plugs, etc.
		Inspect, clean and regap spark plug; replace if necessary.
	Engine air intake system	Check air filter element; clean or replace if necessary.
		Check clamps for tightness; check hose for cracks.
	General vehicle	Check for loose hardware and tighten if necessary.
Two year service by trained technician only (every 200 hours of operation or every 400 rounds for golf cars)	Fuel filters	Replace. Dispose of used filters properly.

⚠ WARNING

- **If any problems are found during scheduled inspection or service, do not operate the vehicle until repairs are made. Failure to make necessary repairs could result in fire, property damage, severe personal injury, or death.**

PERIODIC LUBRICATION SCHEDULES

PERIODIC LUBRICATION SCHEDULE – ELECTRIC VEHICLES

REGULAR INTERVAL	SERVICE	LUBRICATION POINTS	RECOMMENDED LUBRICANT
Semiannually by owner or trained technician (every 50 hours of operation or 100 rounds of golf)	Brake pedal shaft bearings	1	Dry Moly Lube (CCI P/N 1012151)
	Brake linkage and pivots	2	Dry Moly Lube (CCI P/N 1012151)
	Accelerator pivot rod supports	3	Dry Moly Lube (CCI P/N 1012151)
	Charger receptacle	4	WD-40
	Brake slides	5	Dry Moly Lube (CCI P/N 1012151)
	Front suspension (5 fittings)	6	Chassis Lube – EP NLGI Grade 2
Annually by trained technician only (every 100 hours of operation or 200 rounds of golf)	Check/fill transaxle to plug level	7	22 oz. (0.67 L) SAE 30 WT. API Class SE, SF, or SG Oil (or higher)

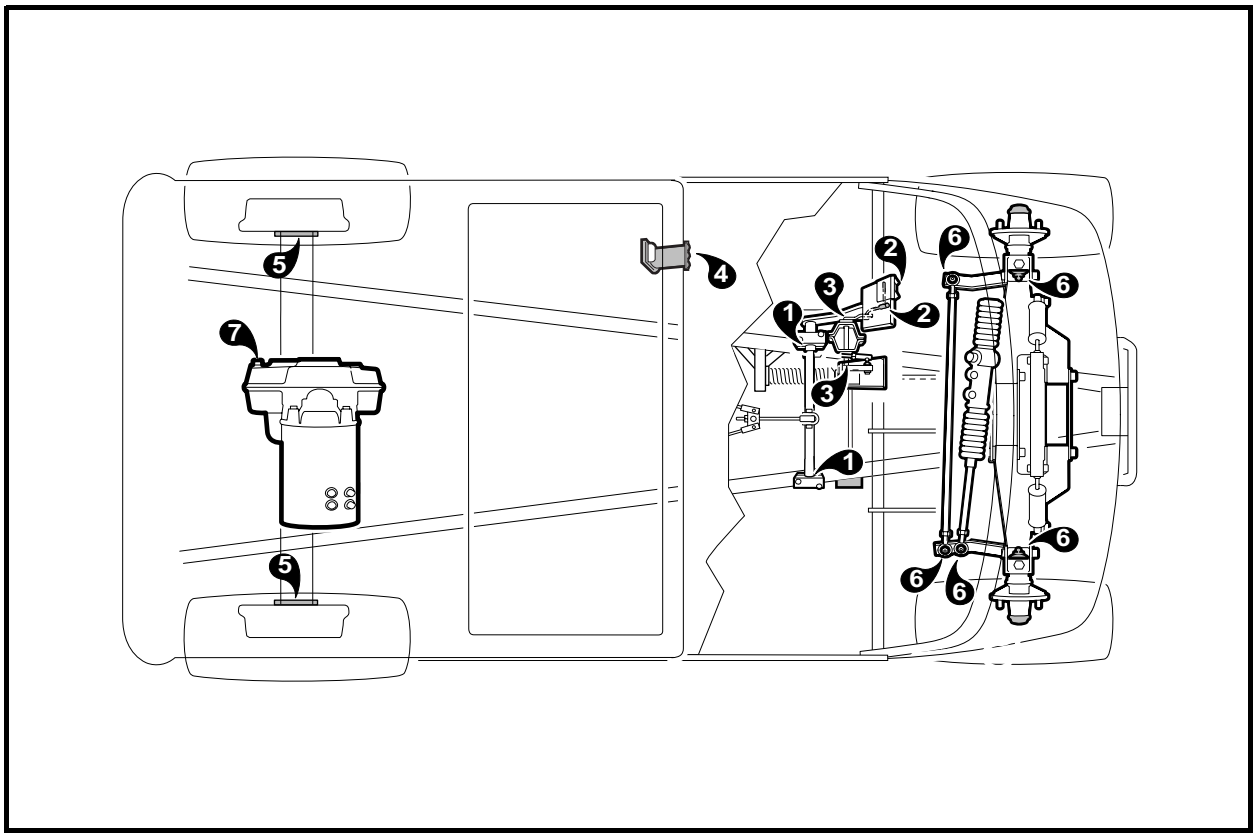

Figure 18 Lubrication Points – Electric Vehicles

PERIODIC LUBRICATION SCHEDULE – GASOLINE VEHICLES

REGULAR INTERVAL	SERVICE	LUBRICATION POINTS	RECOMMENDED LUBRICANT
Semiannually by owner or trained technician (every 50 hours of operation or every 100 rounds of golf)	Brake pedal shaft bearings	1	Dry Moly Lube (CCI P/N 1012151)
	Brake linkage and pivots	2	Dry Moly Lube (CCI P/N 1012151)
	Accelerator push rod pivots, mounts, and shifter cable pivots	3	Dry Moly Lube (CCI P/N 1012151)
	Front suspension (5 fittings)	4	Chassis Lube (EP NLGI Grade 2)
	Brake slides	5	Dry Moly Lube (CCI P/N 1012151)
Annually by trained technician only (every 100 hours of operation or every 200 rounds of golf)	Check/fill unitized transaxle to plug level	6	27 oz. (0.8 L) 80-90 WT. API Class GL-3 or 80-90 WT. AGMA Class EP Gear Lube
First change 100 hours – additional change every 200 hours of operation (or every 400 rounds of golf), or annually, whichever comes first.	Change engine oil and oil filter	7	32 oz. (0.95 L) without filter; 38 oz. (1.12 L) with filter

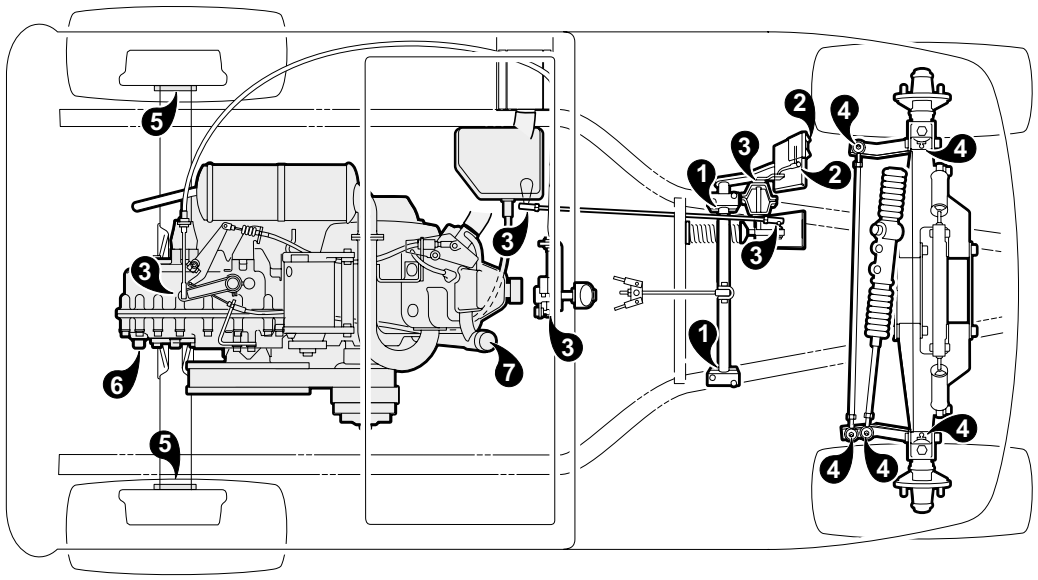

Figure 19 Lubrication Points – Gasoline Vehicles

VEHICLE CONTROLLER – ELECTRIC VEHICLES

The Club Car electric vehicle is equipped with a solid state speed controller. In order to properly service and maintain the solid state controller vehicle, it is necessary to understand the electrical circuitry and the functions of all components in both systems. Therefore, if any repair or servicing needs to be performed, we recommend that it be performed by an authorized Club Car distributor/dealer using Club Car OEM parts.

BATTERIES – ELECTRIC VEHICLES

See General Warnings on page 10.

⚠ DANGER

- **Battery – Explosive gases! Do not smoke. Keep sparks and flames away from the vehicle and service area. Ventilate when charging or operating vehicle in an enclosed area. Wear a full face shield and rubber gloves when working on or near batteries.**
- **Charge batteries in a well-ventilated area only. Batteries emit hydrogen while being charged. Hydrogen is an explosive gas and must never exceed a level of 2% of the air.**
- **Battery – Poison! Contains acid! Causes severe burns. Avoid contact with skin, eyes, or clothing. Antidotes:**
  - **External: Flush with water. Call a physician immediately.**
  - **Internal: Drink large quantities of milk or water followed with milk of magnesia or vegetable oil. Call a physician immediately.**
  - **Eyes: Flush with water for 15 minutes. Call a physician immediately.**

⚠ WARNING

- **Wear safety glasses or approved eye protection when servicing the vehicle or battery charger. Wear a full face shield and rubber gloves when working on or near batteries.**
- **Use insulated tools when working near batteries or electrical connections. Use extreme caution to avoid shorting of components or wiring.**

CAUTION

- **On all electric vehicles, turn off all accessories before charging batteries.**

NOTE: *Recycle or dispose of discarded batteries in accordance with local, state, and federal regulations.*

Club Car electric vehicles use deep-cycle batteries. Automotive batteries should never be used in electric vehicles.

New batteries will not deliver their full capabilities until they have been discharged and recharged 20 to 50 times. To obtain the maximum service life from new batteries, restrict IQ System electric vehicles with new batteries to 36 holes of use between charges in the first two months of operation. Batteries should be fully charged before first use of new vehicle, before first use of a vehicle after storage, and before releasing vehicle for use each day.

BATTERY CARE

To keep batteries in good working condition, follow this maintenance program on a regular basis:

1. The batteries should be kept clean and free of corrosion. Wash tops and terminals of batteries with a solution of baking soda and water (1 cup (237 mL) baking soda per gallon (3.8 L) of water). Rinse solution off of the batteries. Do not allow this solution to enter the battery. Be sure terminals are tight. Let the terminals dry and then coat with Battery Terminal Protector Spray (CCI P/N 1014305). **See following NOTE.**

NOTE: *Dispose of waste water properly.*

2. The electrolyte level in the batteries should be checked weekly **(Figure 20)**. Add water only after charging unless the electrolyte level is below the top of the plates. In this case, add just enough water to cover the plates, charge and then check the level again. Never charge batteries if plates are exposed above electrolyte level. For best battery life, add only distilled water. **See following CAUTION and NOTE.**

⚠ CAUTION

- **Do not overfill the batteries.**

NOTE: *A battery watering gun or bottle is available at many auto parts dealers.*

3. The hold-down straps should be tight enough so that the batteries do not move while the vehicle is in motion, but not so tight as to crack or buckle the battery case. Tighten hold-down retaining nuts to 55 in-lb (6.2 N·m). The terminal connections should be clean and tight, and any worn insulation or frayed wires should be replaced. Tighten battery terminals to 110 in-lb (12.4 N·m). **See following WARNING.**

⚠ WARNING

- **If battery wire terminals are damaged or corroded, replace or clean them as necessary. Failure to do so may cause them to overheat during operation and could result in a fire, property damage, or personal injury.**

4. After use, the batteries should be placed on charge. The batteries should never be left discharged any longer than absolutely necessary (do not leave discharged overnight).

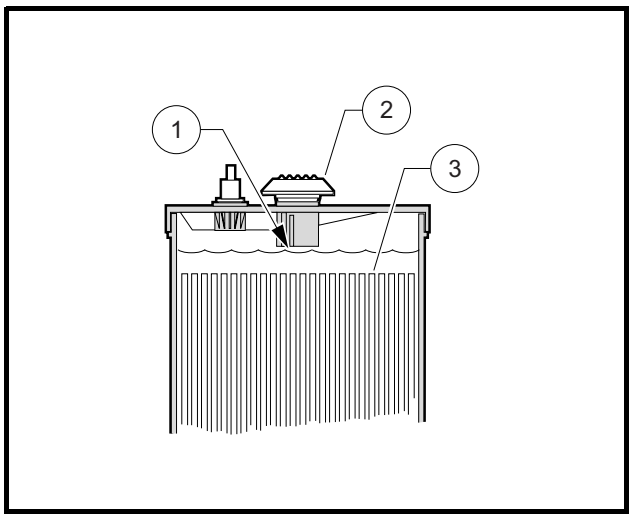

Figure 20 Electric Battery Electrolyte Level

1. Level Indicator 2. Cap 3. Plates
Electrolyte level at least 1/2 inch (13 MM) above plates or to level indicator.

BATTERY CHARGER – ELECTRIC VEHICLES

⚠ DANGER

- **The charging area must be ventilated. Hydrogen level in the air must never exceed 2%. The total volume of air in the charging area must be changed five times per hour. Exhaust fans should be located at the highest point of the roof. Contact a local HVAC engineer.**
- **Do not charge the vehicle batteries with the vehicle covered or enclosed. Any enclosure or cover should be removed or unzipped and pulled back when batteries are being charged. An accumulation of hydrogen gas could result in an explosion.**

⚠ WARNING

- **Only trained technicians should repair or service the charger. Contact your nearest Club Car distributor/dealer.**
- **Each charger should have its own dedicated 15 or 20 ampere separately protected (circuit breaker or fuse) single phase branch circuit, in accordance with all applicable electrical codes for the location.**
- **Connect the charger AC supply cord to a properly grounded, three-wire outlet of the proper voltage and frequency as shown on the charger.**
- **Do not use an adapter to plug the charger with a three-prong plug into a two-prong outlet. Improper connection of the equipment-grounding conductor can result in a fire or an electrical shock.**
- **An extension cord or electrical outlet must accept a three-prong plug. Extension cord should be a three-wire No. 12 AWG (American Wire Gauge) or No. 14 SWG (British Standard Wire Gauge), and be as short as possible. The use of improper extension cord could result in fire or an electrical shock.**
- **Do not operate the charger if it has received a sharp blow, was dropped, or otherwise damaged in any way.**
- **Have worn, cut, or damaged power cords or wires replaced immediately.**
- **Do not use near fuels, grain dust, solvents, thinners, or other flammables. Chargers can ignite flammable materials and vapors.**
- **Do not expose to rain or any liquid. Keep the charger dry.**
- **Never push objects of any kind into the charger through cabinet slots. They may touch dangerous voltage points or cause an electrical short circuit that could result in fire or electrical shock.**
- **Do not connect a stationary charger to the receptacle if the charger cord, plug, or the vehicle receptacle is broken, damaged, or does not make a good electrical connection. Fire or personal injury can result. Have a qualified technician replace the parts.**
- **When the charger is on, the charger DC cord may be disconnected from the vehicle receptacle slowly. Jerking or pulling the DC cord out quickly could cause arcing and burning that could damage the plug and receptacle and could cause batteries to explode.**
- **Do not block or cover the charger ventilation slots. The slots provide ventilation and protect the charger from overheating.**
- **Do not allow clothing, blankets, or other material to cover the charger.**
- **Do not allow the charger to operate for more than 30 minutes at 19 or more amperes.**
- **Install surge arrestors on incoming AC power lines. Surge arrestors will help protect electrical components in the charger and on the vehicle from all but direct or close lightning strikes.**

NOTE: *Because the vehicle's onboard computer (OBC) has a storage charge feature that automatically checks and recharges the batteries as necessary every 15 days, the charger can remain plugged to a IQ System vehicle throughout the storage period.*

At one hour and at two hours into the charge cycle, the charger will shut off in order to run a self-diagnostic program (ammeter will drop to zero). Charging will resume in a few moments (ammeter returns to previous rate of charge).

Each electric vehicle is supplied with a fully automatic battery charger as standard equipment. The AC cord to each charger is to be connected to a source capable of supplying 15 amperes minimum per charger.

To reduce the risk of electric shock, the battery charger must be grounded. The charger is equipped with an AC electric cord having an equipment-grounding conductor and a grounding type plug. The AC plug must be connected to an appropriate receptacle that is properly installed and grounded in accordance with the National Electrical Code and all local codes and ordinances. See the owner's manual supplied with the charger for specific operating instructions before using the charger.

The use of an extension cord with the charger should be avoided. If an extension cord must be used, use a three-conductor no. 12 AWG (American Wire Gauge) or no. 14 SWG (British Standard Wire Gauge), heavy-duty cord with ground, properly wired and in good electrical condition. Keep it as short as possible (no more than 12 feet (3.7 m)). Place all cords so they will not be stepped on, tripped over, or otherwise subject to damage or stress.

Ensure that the charger ventilation slots are unobstructed and that there is adequate ventilation.

CHARGING BATTERIES

⚠ WARNING

- **Be sure all wire connections at the receptacle and the fuse link are clean and tight.**
- **Do not rock or bend the plug. To connect the charger plug to the vehicle receptacle, grasp the plug handle and push the plug straight into the receptacle (Figure 21, Page 39).**
- **Do not pull on the DC cord (Figure 22, Page 39). Do not twist, rock or bend the plug. To disconnect the charger plug from the vehicle receptacle, grasp the plug by the handle and pull the plug straight out of the receptacle.**
- **Do not connect a charger to the receptacle if the charger cord, plug, or the vehicle receptacle is broken, damaged in any manner, or does not make a good electrical connection. Fire or personal injury can result. Have it replaced by a qualified service person immediately.**
- **Failure to follow these instructions could result in damage to the charger cord, the plug, and (or) the vehicle receptacle.**
- **Do not use a charger if:**
  - **The plug is too loose or does not make a good connection.**
  - **The plug and receptacle feel hotter than normal during charge.**
  - **The plug pins or receptacle contacts are bent or corroded.**
  - **The plug, receptacle, or cords are cut, worn, have any exposed wires or are damaged in any way.**
- **Using the charger with any of the above symptoms could result in a fire, property damage, personal injury, or death.**

NOTE: *When temperatures fall below 65 °F (18.3 °C), batteries charged in unheated areas should be placed on charge as soon as possible after use. Batteries are warmest immediately after use, and cold batteries require more time to fully charge.*

Insert the charger DC plug into the vehicle receptacle. The charger will turn on two to ten seconds later **(Figure 21)**.

When inserting the DC plug, align the raised guide on the plug with the guide slot in the receptacle and push straight in slowly.

Club Car battery chargers interact with the vehicle onboard computer. The computer records the amount of energy consumed during vehicle use. While the charger is plugged in, the vehicle's control circuit is locked out, preventing operation of the vehicle as well as the possibility of consequent damage to the charger and the vehicle.

Once the lockout is actuated, the charger turns on. The onboard computer then records the amount of energy being returned to the batteries. When the optimum amount of energy needed to replenish the batteries is returned, the charger will shut off. The control circuit lockout remains activated until the charger plug is disconnected from the vehicle.

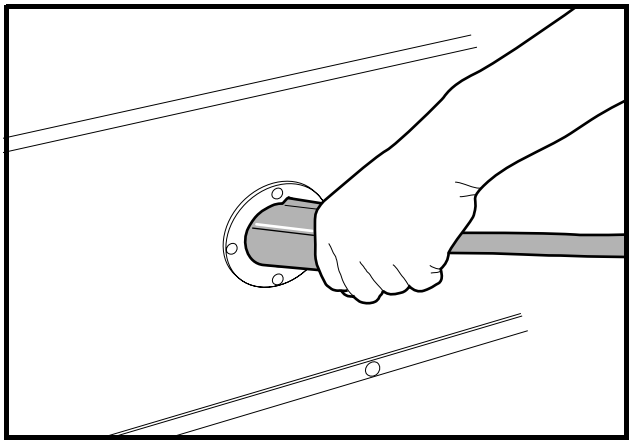

Figure 21 Correct Insertion of Charger DC Plug

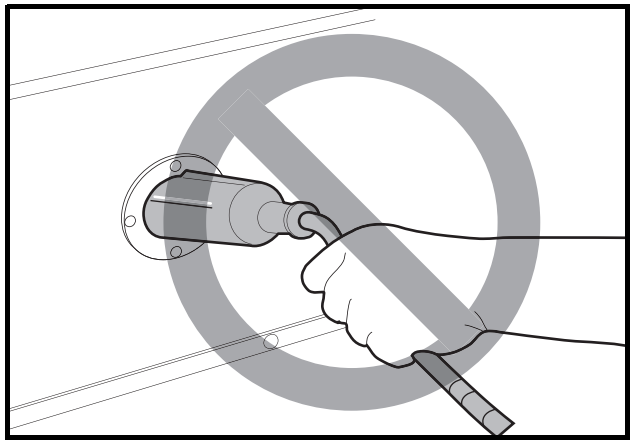

Figure 22 Incorrect Insertion of Charger DC Plug

Only PowerDrive System 48 and IQ System vehicles are compatible with PowerDrive chargers. Other Club Car models or vehicles made by other manufacturers are not compatible.

As long as the charger is allowed to shut off by itself, the batteries will be fully charged. Overcharging and undercharging will normally be prevented.

Batteries should be put on charge even if they have been used for only a short period (9 holes of golf or 10 minutes). The charger is automatic and will turn off when batteries are fully charged. If the charger does not seem to be operating properly, or if the batteries seem weak, contact your local Club Car distributor/dealer.

PLUG AND RECEPTACLE

The charger cord, plug, and receptacle are wear items and should be inspected daily. Visually inspect them for cracks, loose connections, and frayed wiring; they must be replaced when worn or damaged. If charger plug or receptacle show signs of corrosion or the plug is difficult to insert or remove, the receptacle contacts and plug terminals should be cleaned with a good electrical contact cleaner or lightly sprayed with WD-40® brand spray lubricant. The plug should then be inserted and removed several times to ensure ease of insertion, ease of removal, and good electrical contact. **See following NOTE.**

NOTE: *If the warning tag has been damaged or removed from the DC cord, have it replaced immediately.*

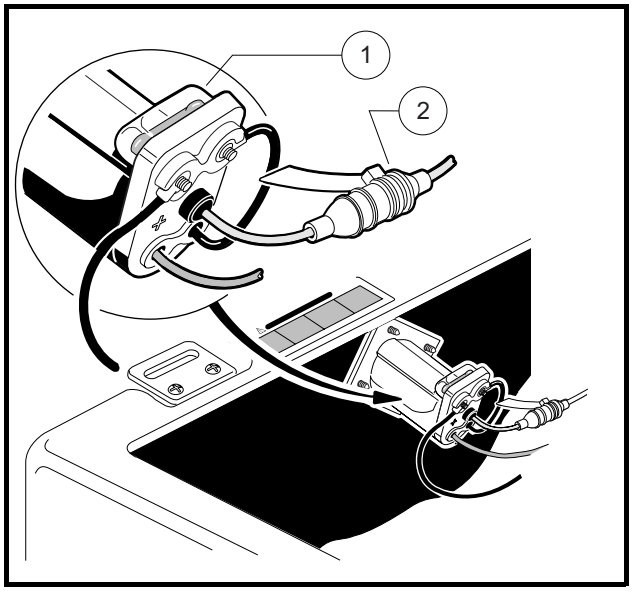

Figure 23 Receptacle Fuse Link

RECEPTACLE FUSE LINK

As an additional feature to protect the batteries and charging circuit from an overload, the electric vehicle is equipped with a receptacle fuse link **(Figure 23)**. If the charger does not come on when the vehicle is placed on charge, visually inspect the fuse link. **See following WARNING.**

⚠ WARNING

- **If the receptacle fuse link is blown, determine the source of the electrical problem and correct it before replacing the fuse. Contact your nearest Club Car distributor/dealer.**

BATTERY – GASOLINE VEHICLES

See General Warnings on page 10.

⚠ DANGER

- **Battery – Explosive gases! Do not smoke. Keep sparks and flames away from the vehicle and service area. Ventilate when charging or operating vehicle in an enclosed area. Wear a full face shield and rubber gloves when working on or near batteries.**
- **Tools, wires, and metal objects can cause sparks when shorted across a battery.**
- **Follow all instructions carefully when working with batteries.**
- **Charge battery in a well-ventilated area only.**
- **Battery – Poison! Contains acid! Causes severe burns. Avoid contact with skin, eyes, or clothing. Antidotes:**

DANGER CONTINUED ON NEXT PAGE...

⚠ DANGER

- **External: Flush with water. Call a physician immediately.**
- **Internal: Drink large quantities of milk or water followed with milk of magnesia or vegetable oil. Call a physician immediately.**
- **Eyes: Flush with water for 15 minutes. Call a physician immediately.**

⚠ WARNING

- **Do not jump start a dead battery using another battery and jumper cables.**

The battery in the Club Car gasoline vehicle is a 12-volt, low maintenance battery that requires infrequent watering **(Figure 24)**.

Any corrosion around the positive (+) or negative (–) terminals should be washed off with a solution of baking soda and water (1 cup (237 mL) per gallon (3.8 L) of water). Rinse solution off the battery. Do not allow this solution to enter battery. Be sure terminals are tight (battery terminals should be tightened to 12 ft-lb (16 N·m)). Let the terminals dry and then spray them with Battery Terminal Protector Spray (CCI P/N 1014305). **See preceding WARNING and following WARNING.**

⚠ WARNING

- **If battery wire terminals are damaged or corroded, replace or clean them as necessary. Failure to do so may cause them to overheat during operation and could result in a fire, property damage, or personal injury.**

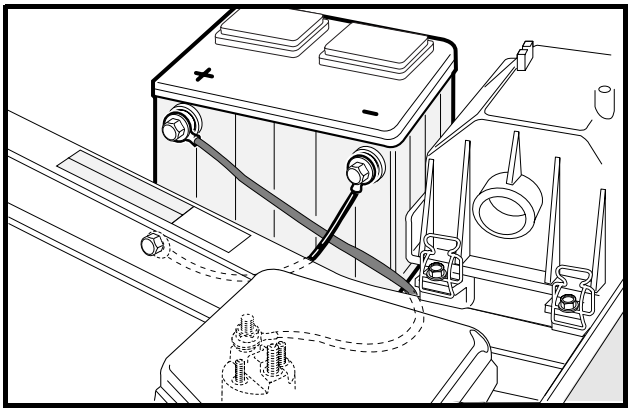

Figure 24 Battery – Gasoline Vehicle

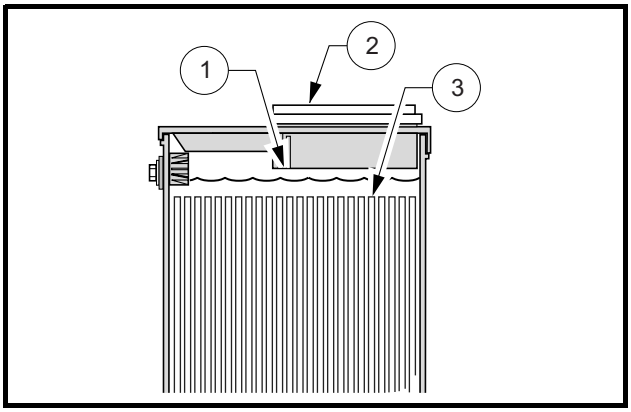

Figure 25 Gasoline Battery Electrolyte Level

1. Level Indicator 2. Cap 3. Plates
Electrolyte level at least 1/2 inch (13 MM) above plates or to level indicator.

Be sure battery clamp is properly tightened. Tighten to 12 ft-lb (16 N·m). A loose battery clamp may allow the battery to become damaged from vibration or jarring.

If battery appears weak, have it charged by a trained technician. The battery should never be left discharged any longer than absolutely necessary (do not leave discharged overnight).

ENGINE OIL – GASOLINE VEHICLES

See General Warnings on page 10.

Even though the low oil warning light on the dash should illuminate if oil level becomes low, engine oil level should be checked monthly. Vehicle should be on a level surface when checking oil**.** Do not overfill with oil.

ENGINE OIL LEVEL CHECK

1. Remove the oil level dipstick from the oil filler tube, and wipe oil off dipstick (1) **(Figure 26)**. **See following CAUTION.**

CAUTION

- **Do not remove dipstick while engine is running.**

2. Check oil by fully inserting the dipstick into the oil filler tube (2) and immediately removing it.
3. If the oil level is at or below the low level mark on the dipstick gauge, add oil until the level is between low and full levels (safe level) (3).
4. Insert the dipstick into the oil filler tube. **See following NOTE.**

NOTE: *Properly recycle or dispose of used oil in accordance with local, state, and federal regulations.*

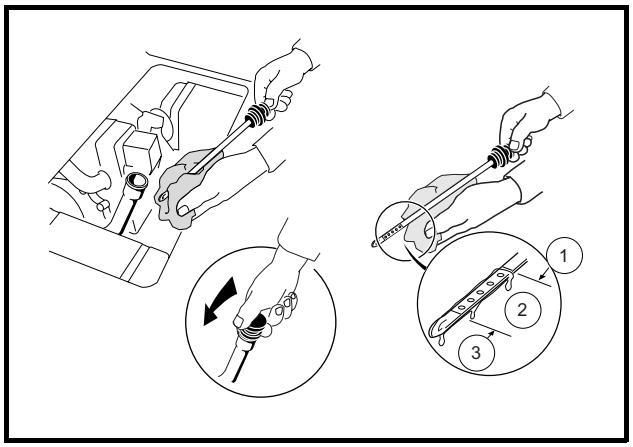

Figure 26 Engine Oil Level Check

1. Full level 2. Safe level 3. Low level

ENGINE OIL AND FILTER CHANGE

Engine oil and oil filter should be changed after the first 100 hours of operation. After that, they should be changed every 200 hours of operation or annually, whichever comes first.

1. Turn the key switch to the OFF position, then remove the key. Place the Forward/Reverse handle in the neutral POSITION. Chock the front wheels.
2. Access the engine compartment.
3. Disconnect the battery cables, negative (–) cable first. **See WARNING "To avoid unintentionally starting..." on page 11.**
4. Position a pan designed for oil changes under the front drain plug **(Figure 27)**.

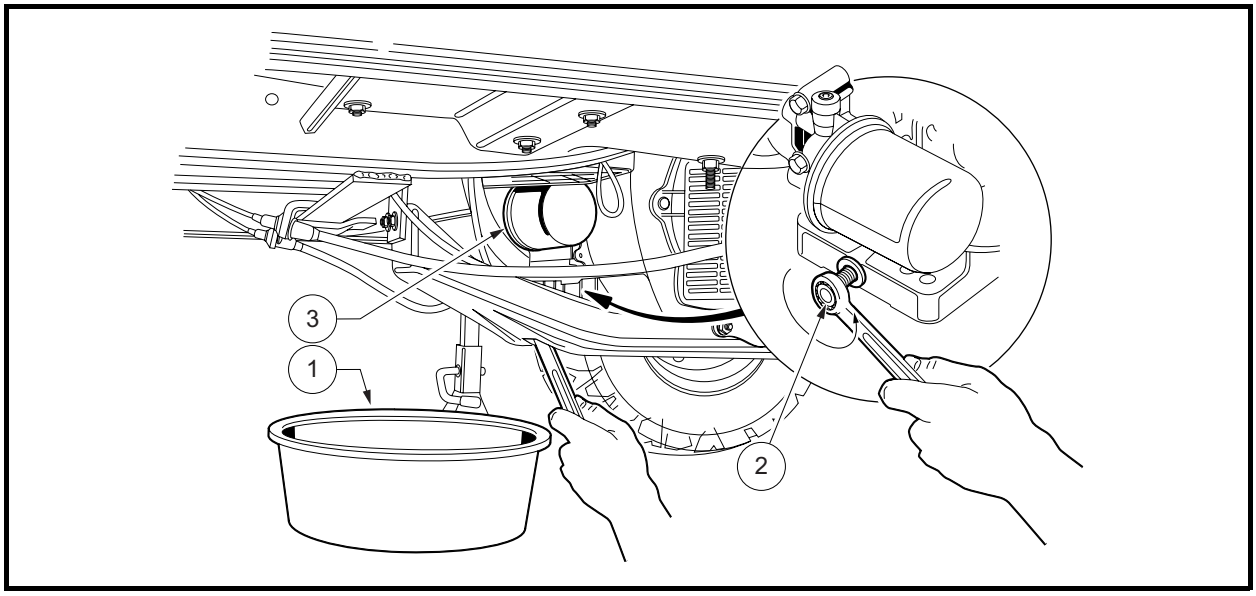

Figure 27 Engine Oil Drain Plug and Pan

1. Drain pan 2. Drain plug 3. Oil filter

5. Use a 14 mm socket or wrench to remove the drain plug, turning it counterclockwise, and allow the engine oil to drain into the pan. **See following WARNING.**

⚠ WARNING

- **Do not attempt to change engine oil when the engine is hot or even warm. Engine oil can cause skin burns.**
- **Wear safety glasses or approved eye protection when servicing the vehicle. Wear rubber gloves when handling oil drain plug, oil filter, and oil drain pan.**

6. Clean the oil drain plug threads with solvent to remove oil and oil residue. Make sure that the compression washer remains on the drain plug.
7. Use a 14 mm socket or wrench and replace the front oil drain plug, turning it clockwise, and tighten to 18 ft-lb (24.4 N·m).
8. Relocate the oil drain pan to a position under the engine oil filter **(Figure 27)**.
9. Remove the engine oil filter (1), turning it counterclockwise, allowing the residual oil in the filter port and filter to drain into the oil drain pan (2) **(Figure 28)**. **See following NOTE.**

NOTE: *An oil drip guard (3) can be used to prevent excess oil from dripping into the engine base plate. Use an empty quart (one liter) container and cut the bottom off at an angle, then slide the open area of the container up and under the oil filter prior to removing. Position the port of the plastic container so oil will be directed into the oil pan. Or, make a drip guard by folding a piece of cardboard, thin metal, or plastic under the oil filter forming a channel to direct the filter port oil into the drain pan.*

Dispose of used oil according to the environmental laws and regulations for your area.

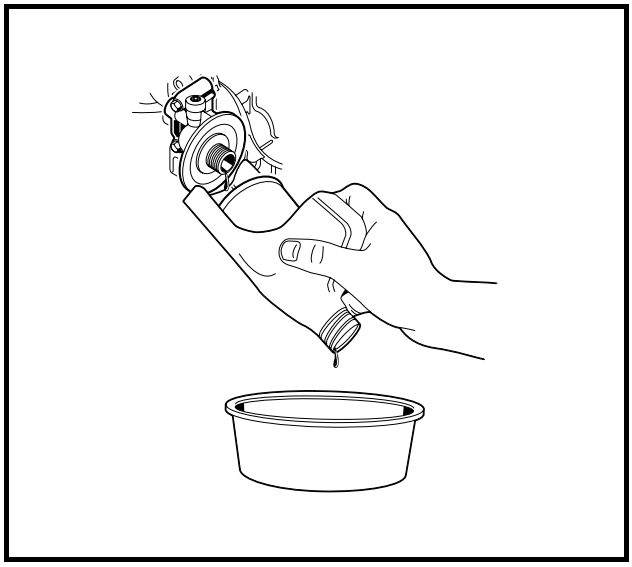

Figure 28 Remove Engine Oil Filter

10. Use a clean rag and wipe the oil filter mounting bracket surface clean where the oil filter gasket seats.

11. Install a new oil filter (CCI P/N 1016467) onto the engine oil filter port. Apply a light coat of white lithium NLGI Number 2 grease (Dow Corning® BR2-Plus or equivalent) or new engine oil to the rubber seal around the outside surface of the filter before attaching it to the oil filter port **(Figure 29)**. This will help seal the filter to the oil mounting bracket.

NOTE: *Use only Club Car oil filters (CCI P/N 1016467) designed for this engine.*

12. Tighten the oil filter by hand until tight. Do not use a band wrench or channel lock plier to tighten.

13. Remove the dipstick and add engine oil into the dipstick port. Use a funnel or pour spout to direct the oil into the dipstick port. With filter change, the engine requires 38 ounces (1.12 liters) of oil per change. Refer to oil viscosity guidelines for selection of oil grade **(Figure 30)**. Replace the dipstick.

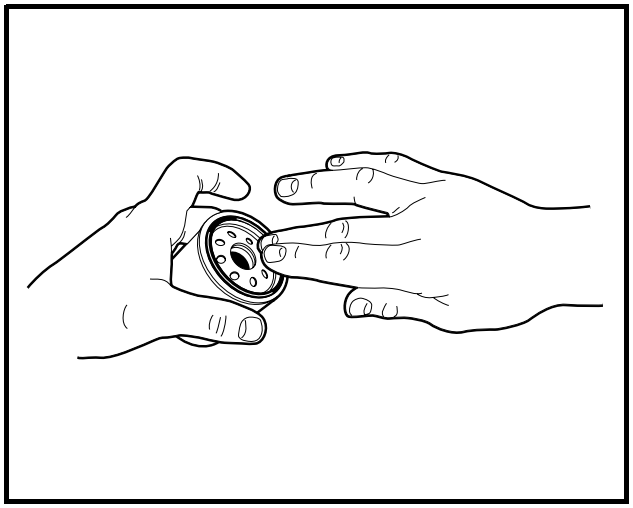

Figure 29 Coat Oil Filter Rubber Seal

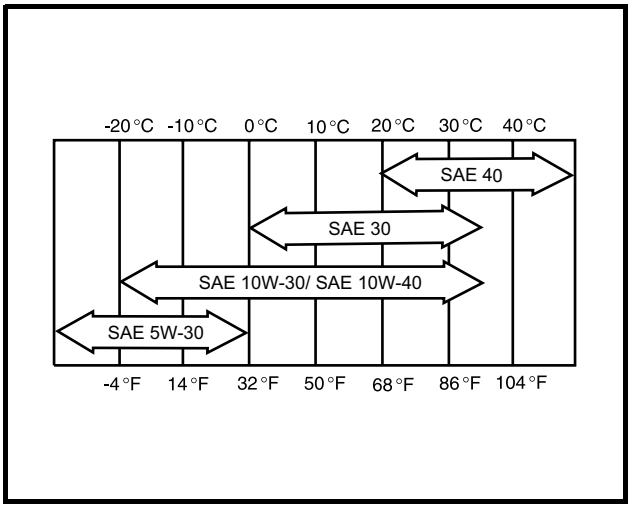

Figure 30 Oil Viscosity Chart

14. Connect the battery cables, positive (+) cable first, and tighten terminals to 12 ft-lb (16 N·m). Coat terminals with Battery Terminal Protector Spray (CCI P/N 1014305).
15. With the Forward/Reverse handle in the NEUTRAL position, start and run the engine for a few minutes. Observe both the drain plug and the oil filter from under the vehicle and watch for oil leaks. If leaks appear, begin with step 1 and repeat the appropriate step for either or both items to correct the problem.
16. Remove the dipstick and check the engine oil as a final step. Replace the dipstick.

FUELING INSTRUCTIONS – GASOLINE VEHICLES

See General Warnings on page 10.

⚠ DANGER

- **Turn the key switch to the OFF position before fueling.**
- **Do not pour fuel into the fuel tank when the engine is hot or while it is running.**
- **To avoid electric arc caused by static electricity, the fuel storage/pumping device must be grounded. If the pump is not grounded, the vehicle must be grounded to the pump before and during the fueling operation.**
- **If the vehicle has an all-weather enclosure installed, be sure the fuel tank is properly vented as shown (Figure 31).**
- **To avoid the possibility of fire, clean up any spilled fuel before operating the vehicle.**

⚠ CAUTION

- **To allow for expansion, do not fill higher than 2.54 cm (one inch) from the top of the fuel tank. Avoid spilling fuel.**

NOTE: *Whenever possible, avoid using oxygenated fuels and fuels that are blended with alcohol. Vehicles to be stored for extended periods should be prepared for storage as instructed.* ***See Preparing the Gasoline Vehicle for Extended Storage on page 27.***

1. Turn the key switch to the OFF position.
2. Lift and remove seat bottom.
3. The fuel tank is located on passenger side of vehicle. Remove fuel cap and fill the fuel tank with fresh unleaded gasoline only. **See preceding CAUTION.**
4. Replace fuel cap on tank. Ensure cap is tightened securely.
5. Replace seat bottom.

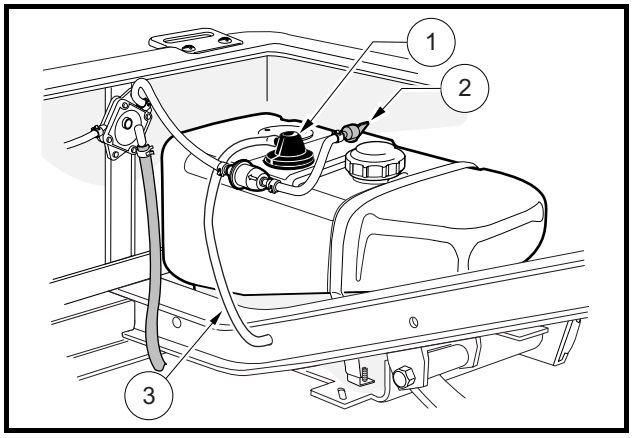

Figure 31 Fuel Tank

1. Vent 2. Shut-off Valve 3. Vent Tubes

CLEANING THE VEHICLE

Club Car DS vehicles are equipped with ArmorFlex® front and rear bodies. Use only commercially available automotive cleaners with a sponge or soft cloth for normal cleaning. A garden hose at normal residential water pressure is adequate.

The manufacturer does not recommend any type of pressure washing or steam cleaning. Such a process (especially if the vehicle has an ArmorFlex rear body that is removed) will expose electrical components to moisture. Moisture entering electrical components can result in water damage and subsequent component failure.

Use non-abrasive wax products. Battery acid, fertilizers, tars, asphalt, creosote, paint, or chewing gum should be removed immediately to prevent possible stains.

The seats of the vehicle will last longer with proper cleaning. Use a solution of 10% liquid soap and warm water applied with a soft cloth. For imbedded dirt, a soft bristle brush may be used. For heavy soiling, difficult stains or scratches, blemishes, or other body damage, see Section 4 of the appropriate maintenance and service manual.

NOTE: *Dispose of waste water properly.*

ACCESSORIES

There is a complete line of accessory equipment available from Club Car and our dealers/distributors. You can obtain the name and phone number of your closest Club Car contact by visiting our web site at www.club-car.com and clicking the "*Dealer Locator*" link.

Care should be taken that these accessories are properly installed by trained technicians, and that they are used in the manner for which they were designed. **See following WARNING.**

⚠ WARNING

- **Tinted windshields and weather-proof enclosures will not protect occupants from flying objects (golf balls, etc.).**

SUBSEQUENT OWNER REGISTRATION

In the event a vehicle is bought as a used vehicle, we strongly urge the new owner to register the vehicle with Club Car. This will enable us to contact you if the need arises. Please send your name, address, and serial number(s) of the vehicle(s) to Club Car, Inc., P.O. Box 204658, Augusta, Georgia 30917-4658, Attention: Vehicle Registration.

VEHICLE SPECIFICATIONS

SPECIFICATIONS	IQ SYSTEM ELECTRIC	GASOLINE
POWER SOURCE		
Drive motor: Direct drive, 48 volts DC, shunt-wound, 3.2 hp	•	
Engine: 4-cycle OHV, 286 cc, 9.5 maximum hp @ 3600 RPM (per SAE J 1940/1349), single-cylinder, air-cooled, with pressure lubrication system		•
Fuel system: Side-draft carburetor with float bowl, fixed jets, fuel filters, and impulse fuel pump		•
Governor: Automatic ground-speed sensing, internally geared in unitized transaxle		•
Ignition: Transistor electronic ignition with electronic RPM limiter		•
Transaxle: Double reduction helical gear with 12.3:1 direct drive axle	•	
Unitized transaxle: Fully synchronized forward and reverse with neutral and reduced speed reverse (11.8:1 forward, 17.1:1 reverse)		•
Torque converter: Automatic, variable-speed, dry type		•
Electrical system: 48 volts DC, reduced speed reverse	•	
Electrical system: 12 volt, 500 cca at 0 °F (-17.8 °C), 650 at 32 °F (0 °C). 105-minute reserve capacity and 35-amp charging capacity		•
Batteries: High capacity, deep cycle, 12-volt	•	
Charger: Automatic, 48-volt; UL and CSA listed	•	
STEERING/SUSPENSION/BRAKES		
Steering: Self-adjusting rack and pinion	•	•
Suspension: Front and rear tapered mono-leaf springs with dual hydraulic shocks	•	•
Brakes: Dual rear wheel self-adjusting brakes with cast iron drums and single brake pedal with automatic-release park brake	•	•
BODY/CHASSIS		
Frame/Chassis: Twin I-Beam welded aluminum	•	•
Front and rear body: ArmorFlex®	•	•
Body finish: Matched paint finish over molded-in color	•	•
Tires: 18 x 8.5 – 8 tubeless, 4 ply rated	•	•
DIMENSIONS/WEIGHT		
Overall length	91.5 in. (232 cm)	
Overall width	47.25 in. (120 cm)	
Overall height (with canopy)	68.5 in. (174 cm)	
Overall height (at steering wheel)	48 in. (122 cm)	
Wheelbase	65.5 in. (166 cm)	
Vehicle Specifications continued on next page...		

SPECIFICATIONS	IQ SYSTEM ELECTRIC	GASOLINE
DIMENSIONS/WEIGHT		
Ground clearance	4.5 in. (11 cm)	
Front wheel tread	34.5 in (88 cm)	
Rear wheel tread	38.5 in. (98 cm)	
Weight (vehicle with canopy, without batteries)	494 lb. (224 kg)	
Weight (dry, without battery)		619 lb. (281 kg)
Forward speed	12-15 mph (19-24 km/h)	
Curb clearance circle (diameter)	17 ft.-6 in. (533 cm)	
Braking distance (at 12 mph (19 km/h))	14 ft. (427 cm)	
Standard seating capacity	2	
LIQUID CAPACITIES		
Transaxle	22 oz. (0.67 L)	
Engine crankcase (without filter)		32 oz. (0.95 L)
Engine crankcase (with filter)		38 oz. (1.12 L)
Unitized transaxle		27 oz. (0.8 L)
Fuel tank		7 gallons (26.5 L)
TIRE PRESSURE		
Front and rear	18-20 psi (1.24-1.38 Bars)	12-14 psi (0.83-0.96 Bars)

CLUB CAR® LIMITED THREE YEAR WARRANTY FOR 2008 INDIVIDUAL GOLF CARS

1. WARRANTY:

CLUB CAR, INC., ("CLUB CAR") hereby warrants to the Original Retail Purchaser that its new 2008 Model DS golf car purchased from CLUB CAR or an authorized distributor or dealer shall be free from defects in material and workmanship under normal use and service as a golf car for the periods stated below, subject to the provisions, limitations and exclusions contained in this limited warranty.

LIMITED THREE YEAR WARRANTY: The golf car frame (excluding the front and rear bumper mounts), rack and pinion steering gearbox unit, suspension system (defined as the shock absorbers, shock mounts, A-plate, leaf springs, shackles, and associated hardware), gasoline engine, unitized transaxle, torque converters (drive and driven), starter generator, transaxle (electric vehicle), and electric motor are warranted with respect to parts and labor for a period of three years from the date of purchase.

LIMITED TWO YEAR WARRANTY: All remaining components of the golf car not specified otherwise, except options and accessories, are warranted with respect to parts and labor against defects in material and workmanship for a period of two years from the date of purchase.

LIMITED ONE YEAR WARRANTY: All original equipment options and accessories supplied by CLUB CAR are warranted with respect to parts and labor against defects in material and workmanship for a period of one year from the date of purchase.

This limited warranty covers material, workmanship and repair labor cost as to those items specifically listed above for the periods specified. Such repair labor shall be performed only by CLUB CAR, its authorized distributors or dealers, or a service agency approved by CLUB CAR.

IF THE WARRANTY REGISTRATION FORM IS NOT COMPLETED AND RETURNED TO CLUB CAR AT THE TIME OF THE ORIGINAL RETAIL SALE, PURCHASER MUST PROVIDE PROOF OF DATE OF PURCHASE WITH ANY WARRANTY CLAIM.

2. EXCLUSIONS:

Excluded from any CLUB CAR warranty are all fuses, filters, decals (except safety decals), spark plugs, light bulbs, lubricants, trim pieces, seats, routine wear items such as the charger plug and receptacle, brake shoes, belts, brushes, bushings, drive buttons, engine mounts, mats and pads, maintenance adjustments, cosmetic deterioration, and items which deteriorate or fail due to exposure or ordinary wear and tear. Batteries, battery charger, onboard computer, and solid-state speed controller are covered under separate CLUB CAR warranties. Also excluded from any CLUB CAR warranty is damage to a golf car or component resulting from a cause other than a defect including unreasonable or unintended strain or use, improper installation of accessories, installation of parts or accessories that are not original equipment, overloading, accident, alteration, abuse or neglect.

Transportation expenses for warranty services are also excluded from this warranty.

3. VOIDING OF WARRANTY:

THIS AND ANY OTHER WARRANTY SHALL BE VOID IF THE GOLF CAR IS ABUSED OR USED IN AN UNINTENDED MANNER OR SHOWS INDICATIONS THAT IT HAS BEEN ALTERED IN ANY WAY, INCLUDING, BUT NOT LIMITED TO, MODIFICATION OF THE SPEED GOVERNOR, BRAKING SYSTEM, STEERING, TRANSAXLE, OR OTHER OPERATING SYSTEMS OF THE CAR TO CAUSE IT TO PERFORM OUTSIDE CLUB CAR SPECIFICATIONS. THE WARRANTY IS LIKEWISE VOID IF THE CAR INVOLVED SHOWS INDICATIONS THAT REASONABLE OR NECESSARY MAINTENANCE AS OUTLINED IN THE OWNER'S MANUAL AND MAINTENANCE AND SERVICE MANUAL WAS NOT PERFORMED AT THE TIME AND IN THE MANNER SPECIFIED IN SUCH MANUALS.

4. SOLE REMEDY:

CLUB CAR's liability under this limited warranty, or in any action whether based upon warranty, contract, negligence, strict product liability, or otherwise, shall be the repair or replacement, at CLUB CAR's option, of the golf car or component thereof that CLUB CAR deems to be defective. Replacement shall mean furnishing, during the applicable limited warranty period, a new golf car or factory-reconditioned vehicle or component thereof that is identical or reasonably equivalent to the warranted product or component at no cost to the purchaser. Repair shall mean remedying a defect in the golf car or component thereof at no cost to the purchaser during the applicable limited warranty period. If CLUB CAR elects to repair the golf car, it may provide factory-reconditioned parts or components. All parts and components replaced under warranty shall become the property of CLUB CAR.

5. HOW TO MAKE A WARRANTY CLAIM:

To make a warranty claim under this limited warranty, you must present the golf car or defective component to an authorized CLUB CAR distributor or dealer or send the defective component, freight prepaid, to WARRANTY SERVICES, CLUB CAR, INC., 4125 Washington Road, Evans, Georgia 30809, U.S.A., 706-863-3000.

6. DISCLAIMER:

THIS LIMITED WARRANTY IS EXCLUSIVE. CLUB CAR MAKES NO OTHER WARRANTY OF ANY KIND, EXPRESSED OR IMPLIED. ANY IMPLIED WARRANTIES OF MERCHANTABILITY OR FITNESS FOR A PARTICULAR PURPOSE WHICH EXCEED THE OBLIGATIONS OR TIME LIMITS STATED IN THIS WARRANTY ARE HEREBY DISCLAIMED BY CLUB CAR AND EXCLUDED FROM THIS WARRANTY. THE PURCHASER AND CLUB CAR EXPRESSLY AGREE THAT THE REMEDY OF THE REPLACEMENT OR REPAIR OF THE DEFECTIVE GOLF CAR OR COMPONENT THEREOF IS THE SOLE REMEDY OF THE PURCHASER. CLUB CAR MAKES NO OTHER REPRESENTATION OR WARRANTY OF ANY KIND, AND NO REPRESENTATIVE, EMPLOYEE, DISTRIBUTOR OR DEALER OF CLUB CAR HAS THE AUTHORITY TO MAKE OR IMPLY ANY REPRESENTATION, PROMISE OR AGREEMENT, WHICH IN ANY WAY VARIES THE TERMS OF THIS WARRANTY.

7. NO CONSEQUENTIAL DAMAGES:

IN NO EVENT SHALL CLUB CAR BE LIABLE FOR ANY INCIDENTAL OR CONSEQUENTIAL DAMAGES INCLUDING, BUT NOT LIMITED TO, LOSS RELATED TO PROPERTY OTHER THAN THE GOLF CAR, LOSS OF USE, LOSS OF TIME, INCONVENIENCE, OR ANY OTHER ECONOMIC LOSS.

Some states allow neither limitation on the duration of an implied warranty nor exclusions or limitation of incidental or consequential damages. Therefore, the above limitations or exclusions may not apply to you.

This warranty gives you specific legal rights, and you may also have other rights, which vary from state to state.

8. INFORMATION:

For further information contact WARRANTY SERVICES, CLUB CAR, INC., P.O. Box 204658, Augusta, Georgia 30917-4658, U.S.A., 706-863-3000.

9. WARNING:

Any modification or alteration of any golf car beyond factory specifications, including those that affect the weight distribution, stability, or speed of the golf car, can cause serious personal injury or death.

CLUB CAR® LIMITED LIFETIME WARRANTY FOR 2008 FLEET GOLF CARS

1. Warranty:

CLUB CAR, INC., (“CLUB CAR”) hereby warrants to the Original Retail Fleet Purchaser or Original Retail Fleet Lessee, as those terms are defined herein, and subject to the provisions, limitations and exclusions contained in this limited warranty, that its new 2008 Model DS golf car purchased from CLUB CAR or an authorized distributor or dealer shall be free from defects in material and workmanship under normal use and service as a golf car for the periods stated below, subject to the provisions, limitations, and exclusions contained in this limited warranty.

LIMITED LIFETIME WARRANTY: The golf car frame (excluding the front and rear bumper mounts), rack and pinion steering gearbox unit and suspension system (defined as the shock absorbers, shock mounts, A-plates, leaf springs, shackles and associated hardware) are warranted for the lifetime of the vehicle with respect to parts and labor against defects in material and workmanship from the date of purchase while owned by the Original Retail Fleet Purchaser or in the possession of the Original Retail Fleet Lessee.

LIMITED THREE YEAR WARRANTY: The gasoline engine, torque converter (drive and driven), unitized transaxle, starter generator, transaxle (electric vehicle) and electric motor are warranted for a period of three years with respect to parts and labor against defects in material and workmanship from the date of purchase while owned by the Original Retail Fleet Purchaser or in the possession of the Original Retail Fleet Lessee.

LIMITED TWO YEAR WARRANTY: All remaining components of the golf car not specified otherwise, except options and accessories, are warranted for a period of two years with respect to parts and labor against defects in material and workmanship from the date of purchase while owned by the Original Retail Fleet Purchaser or in the possession of the Original Retail Fleet Lessee.

LIMITED ONE YEAR WARRANTY: All original equipment options and accessories supplied by CLUB CAR are warranted with respect to parts and labor against defects in material and workmanship for a period of one year from the date of purchase while owned by the Original Retail Fleet Purchaser or in the possession of the Original Retail Fleet Lessee.

This limited warranty covers material, workmanship and repair labor cost as to those items specifically listed above for the periods specified. Such repair labor shall be performed only by CLUB CAR, its authorized distributors or dealers, or a service agency approved by CLUB CAR.

IF THE WARRANTY REGISTRATION FORM IS NOT COMPLETED AND RETURNED TO CLUB CAR AT THE TIME OF THE ORIGINAL RETAIL SALE, PURCHASER MUST PROVIDE PROOF OF DATE OF PURCHASE WITH ANY WARRANTY CLAIM.

2. EXCLUSIONS:

Excluded from any CLUB CAR warranty are all fuses, filters, decals (except safety decals), spark plugs, light bulbs, lubricants, trim pieces, seats, routine wear items such as the charger plug and receptacle, brake shoes, belts, brushes, bushings, drive buttons, engine mounts, mats and pads, maintenance adjustments, cosmetic deterioration, and items which deteriorate or fail due to exposure or ordinary wear and tear. Batteries, battery charger, onboard computer, and solid-state speed controller are covered under separate CLUB CAR warranties. Also excluded from any CLUB CAR warranty is damage to a golf car or component resulting from a cause other than a defect including unreasonable or unintended strain or use, improper installation of accessories, installation of parts or accessories that are not original equipment, overloading, accident, alteration, abuse or neglect.

Transportation expenses for warranty services are also excluded from this warranty.

3. VOIDING OF WARRANTY:

THIS AND ANY OTHER WARRANTY SHALL BE VOID IF THE GOLF CAR IS ABUSED OR USED IN AN UNINTENDED MANNER OR SHOWS INDICATIONS THAT IT HAS BEEN ALTERED IN ANY WAY, INCLUDING, BUT NOT LIMITED TO, MODIFICATION OF THE SPEED GOVERNOR, BRAKING SYSTEM, STEERING, TRANSAXLE, OR OTHER OPERATING SYSTEMS OF THE CAR TO CAUSE IT TO PERFORM OUTSIDE CLUB CAR SPECIFICATIONS. THE WARRANTY IS LIKEWISE VOID IF THE CAR INVOLVED SHOWS INDICATIONS THAT REASONABLE OR NECESSARY MAINTENANCE AS OUTLINED IN THE OWNER'S MANUAL AND MAINTENANCE AND SERVICE MANUAL WAS NOT PERFORMED AT THE TIME AND IN THE MANNER SPECIFIED IN SUCH MANUALS.

4. SOLE REMEDY:

CLUB CAR's liability under this limited warranty, or in any action whether based upon warranty, contract, negligence, strict product liability or otherwise, shall be the repair or replacement, at CLUB CAR's option, of the golf car or component thereof that CLUB CAR deems to be defective. Replacement shall mean furnishing, during the applicable limited warranty period, a new golf car or factory-reconditioned vehicle or component thereof that is identical or reasonably equivalent to the warranted product or component at no cost to the purchaser. Repair shall mean remedying a defect in the golf car or component thereof at no cost to the purchaser during the applicable limited warranty period. If CLUB CAR elects to repair the golf car, it may provide factory-reconditioned parts or components. All parts and components replaced under warranty shall become the property of CLUB CAR.

5. HOW TO MAKE A WARRANTY CLAIM:

To make a warranty claim under this limited warranty, you must present the golf car or defective component to an authorized CLUB CAR distributor or dealer or send the defective component, freight prepaid, to WARRANTY SERVICES, CLUB CAR, INC., 4125 Washington Road, Evans, Georgia 30809, U.S.A., 706-863-3000.

6. DEFINITIONS:

For the purpose of this warranty, an Original Retail Fleet Purchaser is the original purchaser of the golf car who is in the business of owning or operating golf courses and who purchases such golf car for the purpose of renting it to golf players for use on such courses. An Original Retail Fleet Lessee is the first end-user of the golf car who is in the business of owning and operating golf courses and who leases such golf car for the purpose of renting it to golf players for use on such golf courses. In the event the golf car is purchased or leased by any entity for the purpose of leasing it to an Original Retail Fleet Lessee, then this limited warranty shall extend only to the first Original Retail Fleet Lessee, and not to such entity or to any subsequent lessee of the golf car.

7. DISCLAIMER:

THIS LIMITED WARRANTY IS EXCLUSIVE. CLUB CAR MAKES NO OTHER WARRANTY OF ANY KIND, EXPRESSED OR IMPLIED. ANY IMPLIED WARRANTIES OF MERCHANTABILITY OR FITNESS FOR A PARTICULAR PURPOSE WHICH EXCEED THE OBLIGATIONS OR TIME LIMITS STATED IN THIS WARRANTY ARE HEREBY DISCLAIMED BY CLUB CAR AND EXCLUDED FROM THIS WARRANTY. THE PURCHASER AND CLUB CAR EXPRESSLY AGREE THAT THE SOLE REMEDY OF THE REPLACEMENT OR REPAIR OF THE DEFECTIVE GOLF CAR OR COMPONENT THEREOF IS THE SOLE REMEDY OF THE PURCHASER. CLUB CAR MAKES NO OTHER REPRESENTATION OR WARRANTY OF ANY KIND, AND NO REPRESENTATIVE, EMPLOYEE, DISTRIBUTOR OR

DEALER OF CLUB CAR HAS THE AUTHORITY TO MAKE OR IMPLY ANY REPRESENTATION, PROMISE OR AGREEMENT, WHICH IN ANY WAY VARIES THE TERMS OF THIS WARRANTY.

8. NO CONSEQUENTIAL DAMAGES:

IN NO EVENT SHALL CLUB CAR BE LIABLE FOR ANY INCIDENTAL OR CONSEQUENTIAL DAMAGES INCLUDING, BUT NOT LIMITED TO, LOSS RELATED TO PROPERTY OTHER THAN THE GOLF CAR, LOSS OF USE, LOSS OF TIME, INCONVENIENCE, OR ANY OTHER ECONOMIC LOSS.

Some states allow neither limitation on the duration of an implied warranty nor exclusions or limitation of incidental or consequential damages. Therefore, the above limitations or exclusions may not apply to you.

This warranty gives you specific legal rights, and you may also have other rights, which vary from state to state.

9. INFORMATION:

For further information contact WARRANTY SERVICES, CLUB CAR, INC., P.O. Box 204658, Augusta, Georgia 30917-4658, U.S.A., 706-863-3000.

10. WARNING:

Any modification or alteration of any golf car beyond factory specifications, including those that affect the weight distribution, stability, or speed of the golf car, can cause serious personal injury or death.

CLUB CAR® LIMITED FOUR YEAR WARRANTY FOR 2008 DEEP CYCLE 12-VOLT BATTERIES

CLUB CAR, INC., ("CLUB CAR") hereby warrants to the original retail purchaser that the Deep Cycle 12 volt Battery installed in its new DS electric vehicle equipped with the IQ System™ purchased from CLUB CAR or an authorized distributor or dealer will be free from defects in material and workmanship and will provide 36-hole performance (60 minute discharge capacity) for a period of four years or 800 rounds, whichever first occurs, from the date of purchase subject to the terms and conditions contained herein.

This limited warranty only covers defects in material and workmanship for a period of four years or 800 golf car rounds or 16,000 energy units from date of purchase. The terms of this four-year or 800 round limited warranty shall be as follows:

Vehicles used for golf, free replacement with respect to parts and labor within four years or 800 rounds or 16,000 energy units, whichever first occurs, from date of purchase.

Vehicles used for purposes other than golf, free replacement with respect to parts and labor within four years or 16,000 energy units as recorded by the Onboard Computer, whichever first occurs, from the date of purchase.

The battery should be returned to an authorized CLUB CAR distributor or dealer with evidence of proof of purchase date and number of rounds, freight prepaid. CLUB CAR reserves the right to test and recharge any battery returned for adjustment, and to verify number of rounds played by accessing information contained in the IQ System Onboard Computer.

LIMITED WARRANTY EXCLUSIONS

THE PROVISIONS OF THIS LIMITED WARRANTY SHALL NOT APPLY TO FAILURE DUE TO:

1)Abuse such as overcharging, undercharging, improper fluid levels, loose wiring, or rusted or corroded hardware;

2)Lack of proper maintenance as outlined in the electric vehicle owner's manual;

3)Damages caused by improper installation of the battery;

4)Neglect, breakage, freezing, fire, explosion, wreckage, the addition of any chemical, or the operation of the battery in an uncharged condition (below half charge 1.200 specific gravity);

5)A battery damaged by a defective charger.

Without limiting the generality of the foregoing in any way, and as part of its limited warranty exclusion, CLUB CAR does not warrant that its PowerDrive battery is suitable for use in any application other than in its products. As in the use of any battery, a prudent owner will read and study the charger owner's manual, the electric vehicle owner's manual, the operator instructions, and the battery warning labels; and will exercise due care in working on or around batteries.

Transportation expenses for warranty services are also excluded from this warranty.

WARRANTY LIMITATIONS

CLUB CAR's liability under this limited warranty shall be to replace a defective battery. Replacement shall be furnishing a new or used battery with sufficient life to complete the remainder of the warranty term, which is identical or reasonably equivalent to the warranted product at no cost to the purchaser during the four-year, 800 round or 16,000 Energy Unit limited warranty period, whichever first occurs. All batteries, which are replaced under this limited warranty, become the property of CLUB CAR.

THIS LIMITED WARRANTY IS EXCLUSIVE. CLUB CAR MAKES NO OTHER WARRANTY OF ANY KIND, EXPRESSED OR IMPLIED. ANY IMPLIED WARRANTIES OF MERCHANTABILITY OR FITNESS FOR A PARTICULAR PURPOSE WHICH EXCEED THE OBLIGATIONS OR TIME LIMITS STATED IN THIS WARRANTY ARE HEREBY DISCLAIMED BY CLUB CAR AND EXCLUDED FROM THIS WARRANTY. THE PURCHASER AND CLUB CAR EXPRESSLY AGREE THAT THE REPLACEMENT OR REPAIR OF THE DEFECTIVE VEHICLE OR COMPONENT THEREOF IS THE SOLE REMEDY OF THE PURCHASER. CLUB CAR MAKES NO OTHER REPRESENTATION OR WARRANTY OF ANY KIND AND NO REPRESENTATIVE, EMPLOYEE, DISTRIBUTOR OR DEALER OF CLUB CAR HAS THE AUTHORITY TO MAKE OR IMPLY ANY REPRESENTATION, PROMISE OR AGREEMENT, WHICH IN ANY WAY VARIES THE TERMS OF THIS WARRANTY.

This battery is intended to be used by persons with training and experience with batteries and only in CLUB CAR electric vehicles. Any other use renders the Limited Warranties expressed herein and all implied warranties null and void and same are hereby excluded.

ALSO EXCLUDED FROM THIS LIMITED WARRANTY ARE ANY AND ALL INCIDENTAL OR CONSEQUENTIAL DAMAGES INCLUDING, BUT NOT LIMITED TO, LOSS OF USE OR REVENUE, LOSS OF TIME, INCONVENIENCE OR ANY OTHER ECONOMIC LOSS.

Damage not resulting from a defect in material or workmanship or that occurs due to abuse or neglect (including failure to provide reasonable and necessary maintenance), accident or alteration is excluded from this limited warranty.

Some states allow neither limitation on the duration of an implied warranty nor exclusions or limitations of incidental or consequential damages. Therefore, the above limitations or exclusions may not apply to you.

This warranty gives you specific legal rights, and you may also have other rights, which vary from state to state.

For further information contact WARRANTY SERVICES, CLUB CAR, INC., P.O. Box 204658, Augusta, Georgia, 30917-4658, U.S.A., 706-863-3000.

CLUB CAR® LIMITED FOUR YEAR WARRANTY FOR 2008 ONBOARD COMPUTERS AND SOLID STATE SPEED CONTROLLERS

CLUB CAR, INC., (“CLUB CAR”) hereby warrants to the original retail purchaser that the new Onboard Computer and the Solid State Speed Controller, hereinafter called “Computer” and “Controller” respectively, installed in its new electric vehicle equipped with the PowerDrive® System 48™, PowerDrive Plus®, or IQ System™ or IQ Plus™ purchased from CLUB CAR or an authorized distributor or dealer will be free from defects in material and workmanship for a period of four years or 800 rounds, whichever first occurs, from the date of purchase subject to the terms and conditions contained herein.

This limited warranty only covers defects in material and workmanship for a period of four years or 800 golf car rounds or 16,000 energy units from date of purchase. The terms of this four-year or 800 round limited warranty shall be as follows:

Vehicles used for golf, free replacement with respect to parts and labor within four years or 800 rounds or 16,000 energy units, whichever first occurs, from date of purchase.

Vehicles used for purposes other than golf, free replacement with respect to parts and labor within four years or 16,000 energy units as recorded by the Computer, whichever first occurs, from date of purchase.

The Computer or Controller should be returned to an authorized CLUB CAR distributor or dealer with evidence of proof of purchase date and number of rounds, freight prepaid. CLUB CAR reserves the right to test any Computer returned for warranty and to verify number of rounds played by accessing information contained in the Computer.

LIMITED WARRANTY EXCLUSIONS

THE PROVISIONS OF THIS LIMITED WARRANTY SHALL NOT APPLY TO FAILURE DUE TO:

1) Abuse or neglect, such as improper battery fluid levels, loose wiring, or rusted or corroded hardware;

2) Lack of proper maintenance as outlined in the electric vehicle owner’s manual;

3) Damages caused by improper installation of the Computer or Controller;

4) Vehicles charged by systems other than the CLUB CAR PowerDrive Charger.

Without limiting the generality of the foregoing in any way, and as part of its limited warranty exclusion, CLUB CAR does not warrant that the Computer or Controller is suitable for use in any application other than its PowerDrive System 48, PowerDrive Plus, and IQ System products. As in the use of any battery operated device, a prudent owner will read and study the charger owner's manual, the electric vehicle owner's manual, the operator instructions, and the battery warning labels; and will exercise due care in working on or around batteries.

Transportation expenses for warranty services are also excluded from this warranty.

WARRANTY LIMITATIONS:

CLUB CAR's liability under this limited warranty shall be to replace a defective Computer or Controller. Replacement shall be furnishing a new or reconditioned Computer or Controller that is identical or reasonably equivalent to the warranted product at no cost to the purchaser during the four-year or 800 round limited warranty period for golf use or 4 years or 16,000 energy units for use other than golf, whichever first occurs, except for transportation expenses. All parts and components replaced under this limited warranty become the property of CLUB CAR.

THIS LIMITED WARRANTY IS EXCLUSIVE. CLUB CAR MAKES NO OTHER WARRANTY OF ANY KIND, EXPRESSED OR IMPLIED. ANY IMPLIED WARRANTIES OF MERCHANTABILITY OR FITNESS FOR A PARTICULAR PURPOSE WHICH EXCEED THE OBLIGATIONS OR TIME LIMITS STATED IN THIS WARRANTY ARE HEREBY DISCLAIMED BY CLUB CAR AND EXCLUDED FROM THIS WARRANTY. THE PURCHASER AND CLUB CAR EXPRESSLY AGREE THAT THE REPLACEMENT OR REPAIR OF THE DEFECTIVE VEHICLE OR COMPONENT THEREOF IS THE SOLE REMEDY OF THE PURCHASER. CLUB CAR MAKES NO OTHER REPRESENTATION OR WARRANTY OF ANY KIND AND NO REPRESENTATIVE, EMPLOYEE, DISTRIBUTOR OR DEALER OF CLUB CAR HAS THE AUTHORITY TO MAKE OR IMPLY ANY REPRESENTATION, PROMISE OR AGREEMENT, WHICH IN ANY WAY VARIES THE TERMS OF THIS WARRANTY.

This computer or controller is intended to be used only in CLUB CAR PowerDrive System 48, PowerDrive Plus, and IQ System electric vehicles. Any other use renders the Limited Warranties expressed herein and all implied warranties null and void and same are hereby excluded.

ALSO EXCLUDED FROM THIS LIMITED WARRANTY ARE ANY AND ALL INCIDENTAL OR CONSEQUENTIAL DAMAGES INCLUDING, BUT NOT LIMITED TO, LOSS OF USE OR REVENUE, LOSS OF TIME, INCONVENIENCE OR ANY OTHER ECONOMIC LOSS.

Damage not resulting from a defect in material or workmanship or that occurs due to abuse or neglect (including failure to provide reasonable and necessary maintenance), accident or alteration is excluded from this limited warranty.

Some states allow neither limitation on the duration of an implied warranty nor exclusions or limitations of incidental or consequential damages. Therefore, the above limitations or exclusions may not apply to you.

This warranty gives you specific legal rights, and you may also have other rights, which vary from state to state.

For further information contact WARRANTY SERVICES, CLUB CAR, INC., P.O. Box 204658, Augusta, Georgia, 30917-4658, U.S.A., 706-863-3000.

CALIFORNIA EMISSION CONTROL WARRANTY STATEMENT

Your new Club Car, Inc. ("CLUB CAR") vehicle engine complies with both the U.S. EPA and State of California emission regulations. However, the use of gasoline powered golf cars in areas of California that do not attain the federal ozone standards is illegal. Please refer to the Air Resources Board information at http://www.arb.ca.gov/enf/enf.htm for compliance.

YOUR WARRANTY RIGHTS AND OBLIGATIONS:

The California Air Resources Board ("CARB") and CLUB CAR are pleased to explain the emission control system warranty on your 2008 vehicle engine. In California, new small off-road engines (SORE) must be designed, built and equipped to meet the State's stringent anti-smog standards. CLUB CAR must warrant the emission control system on the vehicle engine for the periods of time listed below provided there has been no abuse, neglect or improper maintenance of your small off-road engine. Your emission control system may include parts such as the carburetor or fuel-injection system, the ignition system, and catalytic converter. Also included may be hoses, belts, connectors and other emission-related assemblies.

Where a warrantable condition exists, CLUB CAR will repair your vehicle engine at no cost to you including diagnosis, parts and labor.

MANUFACTURER'S WARRANTY COVERAGE:

This emission control system is warranted for two years. If any emission-related part on your equipment is defective, the part will be repaired or replaced by CLUB CAR.

OWNER'S WARRANTY RESPONSIBILITIES:

- As the vehicle engine owner, you are responsible for the performance of the required maintenance listed in your owner's manual. CLUB CAR recommends that you retain all receipts covering maintenance on your vehicle engine, but CLUB CAR cannot deny warranty solely for the lack of receipts or for your failure to ensure the performance of all scheduled maintenance.
- As the vehicle engine owner, you should however be aware that CLUB CAR may deny you warranty coverage if vehicle engine or a part has failed due to abuse, neglect, improper maintenance or unapproved modifications.
- You are responsible for presenting vehicle engine to a CLUB CAR distribution center as soon as a problem exists. The warranty repairs should be completed in a reasonable amount of time, not to exceed 30 days.

If you have any questions regarding your warranty rights and responsibilities, you should contact WARRANTY SERVICES, CLUB CAR, INC., P.O. Box 204658, Augusta, Georgia 309017-4658, U.S.A., 1-706-863-3000.

CLUB CAR EXPLANATION OF EMISSION CONTROL WARRANTY:

1. WARRANTY:

CLUB CAR warrants to the ultimate purchaser and each subsequent purchaser that the SORE or equipment is designed, built and equipped so as to conform with all applicable regulations; and free from defects in materials and workmanship that cause the failure of a warranted part to be identical in all material respects to that part as described in CLUB CARs application for certification. The warranty period begins on the date the engine or equipment is delivered to an ultimate purchaser or first placed into service. The warranty period is two years.

2. COVERAGE:

Subject to certain conditions and exclusions as stated below, the warranty on emission-related parts is as follows:

(1) Any warranted part that is not scheduled for replacement as required maintenance in the written instructions supplied, is warranted for the warranty period stated above. If the part fails during the period of warranty coverage, the part will be repaired or replaced by CLUB CAR according to subsection (4) below. Any such part repaired or replaced under warranty will be warranted for the remainder of the period.

(2) Any warranted part that is scheduled only for regular inspection in the written instructions supplied is warranted for the warranty period stated above. Any such part repaired or replaced under warranty will be warranted for the remaining warranty period.

(3) Any warranted part that is scheduled for replacement as required maintenance in the written instructions supplied is warranted for the period of time before the first scheduled replacement date for that part. If the part fails before the first scheduled replacement, the part will be repaired or replaced by CLUB CAR according to subsection (4) below. Any such part repaired or replaced under warranty will be warranted for the remainder of the period prior to the first scheduled replacement point for the part.

(4) Repair or replacement of any warranted part under the warranty provisions herein must be performed at a warranty station* at no charge to the owner.

(5) Notwithstanding the provisions herein, warranty services or repairs will be provided at all of our distribution centers that are franchised to service the subject engines or equipment.

(6) The engine or equipment owner will not be charged for diagnostic labor that is directly associated with diagnosis of a defective, emission-related warranted part, provided that such diagnostic work is performed at a warranty station*.

(7) CLUB CAR is liable for damages to other engine or equipment components proximately caused by a failure under warranty of any warranted part.

(8) Throughout the engine or equipment warranty period stated above, CLUB CAR will maintain a supply of warranted parts sufficient to meet the expected demand for such parts.

(9) Any replacement part may be used in the performance of any warranty maintenance or repairs and must be provided without charge to the owner. Such use will not reduce the warranty obligations of CLUB CAR

(10) Add-on or modified parts that are not exempted by the Air Resources Board may not be used. The use of any non-exempted add-on or modified parts by the ultimate purchaser will be grounds for disallowing a warranty claims. CLUB CAR will not be liable to warrant failures of warranted parts caused by the use of a non-exempted add-on or modified part.

*CLUB CAR, its authorized dealers, or a service agency approved by CLUB CAR.

ITEMS COVERED BY THIS WARRANTY:

The repair or replacement of any warranted part otherwise eligible for warranty coverage may be excluded from such warranty coverage if CLUB CAR demonstrates that the engine or equipment has been abused, neglected, or improperly maintained, and that such abuse, neglect, or improper maintenance was the direct cause of the need for repair or replacement of the part. That notwithstanding, any adjustment of a component that has a factory installed, and properly operating, adjustment limiting device is still eligible for warranty coverage. The following emission warranty parts list are covered:

SYSTEMS COVERED	PARTS DESCRIPTION
Fuel Metering	Carburetor assembly, fuel injection pump, fuel injection nozzle, fuel regulator
Exhaust	Catalytic Converter, Exhaust Manifold
Air Induction	Air filter housing, air filter*, crankcase breather tube
Ignition	Flywheel magneto, ignition pulse generator, ignition coil assembly, ignition control module, spark plug cap, spark plug*
Positive Crankcase Ventilation (PCV) System	PCV valve, oil filler cap
Evaporative System	Fuel Tank, Fuel Cap, Fuel Lines, Fuel Line Fittings, Clamps, Pressure Relief Valves, Purge Valves, Vapor Hoses, Carbon Canister, Canister Mounting Brackets, Carbon Canister Purge Port Connector
Misc. Parts	Belts, hosing, tubing, fittings, seals, gaskets, clamps, and switches associated with the above systems

Emission-related parts will vary between vehicles; therefore, certain vehicles may not include all of the listed parts or may include equivalent parts.

3. EXCLUSIONS:

Excluded from this warranty is damage to a vehicle or component resulting from a cause other than a defect including unreasonable or unintended strain or use, improper installation of accessories, installation of parts or accessories that are not original equipment, overloading, accident, alteration, abuse or neglect. This warranty covers only those failures resulting from defects in material or workmanship.

Transportation expenses for warranty services are also excluded from this warranty.

4. VOIDING OF WARRANTY:

THIS AND ANY OTHER WARRANTY SHALL BE VOID IF THE VEHICLE IS ABUSED OR USED IN AN UNINTENDED MANNER OR SHOWS INDICATIONS THAT IT HAS BEEN ALTERED IN ANY WAY, INCLUDING, BUT NOT LIMITED TO, MODIFICATION OF THE SPEED GOVERNOR, BRAKING SYSTEM, STEERING, TRANSAXLE, OR OTHER OPERATING SYSTEMS OF THE VEHICLE TO CAUSE IT TO PERFORM OUTSIDE CLUB CAR SPECIFICATIONS. THE WARRANTY IS LIKEWISE VOID IF THE VEHICLE INVOLVED SHOWS INDICATIONS THAT REASONABLE OR NECESSARY MAINTENANCE AS OUTLINED IN THE OWNERS MANUAL AND MAINTENANCE AND SERVICE MANUAL WAS NOT PERFORMED AT THE TIME AND IN THE MANNER SPECIFIED IN SUCH MANUALS.

5. NO CONSEQUENTIAL DAMAGES:

In no event shall Club Car be liable for any incidental or consequential damages including, but not limited to, loss related to property other than the vehicle, loss of use, loss of time, inconvenience, or any other economic loss. This warranty is applicable only where the California or U.S. EPA emission control system warranty regulation is in effect.

6. HOW TO MAKE A WARRANTY CLAIM:

To make a warranty claim under this limited warranty, you must present the vehicle or defective component to an authorized CLUB CAR dealer or send the defective component, freight prepaid, to WARRANTY SERVICES, CLUB CAR, INC., 4125 Washington Road, Evans, Georgia 30809, U.S.A., 706-863-3000.

IF THE WARRANTY REGISTRATION FORM IS NOT COMPLETED AND RETURNED TO CLUB CAR AT THE TIME OF THE ORIGINAL RETAIL SALE, PURCHASER MUST PROVIDE PROOF OF DATE OF PURCHASE WITH ANY WARRANTY CLAIM.

EMISSION CONTROL INFORMATION

Fuel Information

THIS VEHICLE IS CERTIFIED TO OPERATE ON UNLEADED REGULAR GRADE GASOLINE ONLY.A minimum of 87 octane of the anti-knock index is recommended.The anti-knock index is posted on service station pumps in the U.S.A.

Emission Control Information

To protect the environment in which we all live, Club Car has incorporated crankcase emission (1) and exhaust emission (2) control systems (EM) in compliance with applicable regulations of the U.S.Environmental Protection Agency and California Air Resources Board.

1.Crankcase Emission Control System

A sealed-type crankcase emission control system is used to eliminate blow-by gases.The blow-by gases are led to the breather chamber through the crankcase.Then, it is led to the air cleaner.

Oil is separated from the gases while passing through the inside of the breather chamber from the crankcase, and then returned back to the bottom of the crankcase.

2.Exhaust Emission Control System

The exhaust emission control system applied to this engine consists of a carburetor and an ignition system having optimum ignition timing characteristics.

The carburetors have been calibrated to provide lean air/fuel mixture characteristics and optimum fuel economy with a suitable air cleaner and exhaust system.

Maintenance and Warranty

Proper maintenance is necessary to ensure that your engine will continue to have low emission levels.Those items identified by the Periodic Maintenance Chart are necessary to ensure compliance with the applicable standards.

The Club Car Limited Emission Control System Warranty requires that you return your engine to an authorized Club Car Dealer for remedy under warranty.Please read the warranty carefully, and keep it valid by complying with the owner's obligations it contains.

Tampering with Emission Control System Prohibited

California State law prohibits the following acts or the causing thereof:(1) the removal or rendering inoperative by any person other than for purposes of maintenance, repair, or replacement, of any device or element of design incorporated into any new engine for the purposes of emission control prior to its sale or delivery to the ultimate purchaser or while it is in use, or (2) the use of the engine after such device or element of design has been removed or rendered inoperative by any person.

Among those acts presumed to constitute tampering are the acts listed below:

Do not tamper with the original emission related parts:

- Carburetor and internal parts
- Spark plugs
- Magneto or electronic ignition system
- Fuel filter element
- Air cleaner element
- Crankcase
- Cylinder head
- Breather chamber and internal parts
- Intake pipe and tube

FUEL AND OIL RECOMMENDATIONS

Fuel

Use only clean, fresh, unleaded regular grade gasoline.

Octane Rating

The octane rating of a gasoline is a measure of its resistance to "knocking".Use of a minimum of 87 octane of the anti-knock index is recommended.The anti-knock index is posted on service station pumps in the U.S.A.

NOTE

- If "knocking or pinging"occurs, use a different brand of gasoline or higher octane rating.

⚠ CAUTION

- Do not mix oil with gasoline.

Oxygenated Fuel

If you use oxygenated fuel (either ethanol or MTBE added to gasoline), be sure it is unleaded and meets the minimum octane rating requirement.

The following are the EPA approved percentages of fuel oxygenates.

ETHANOL:(Ethyl or Grain Alcohol) You may use gasoline containing up to 10% ethanol by volume.

MTBE:(Methyl Tertiary Butyl Ether) You may use gasoline containing up to 15% MTBE by volume.

METHANOL:(Methanol or Wood Alcohol) 5% by volume.

You may use gasoline containing up to 5% methanol by volume, as long as it also contains cosolvents and corrosion inhibitors to protect the fuel system.Gasoline containing more than 5% methanol by volume may cause starting and/or performance problems.It may also damage metal, rubber, and plastic parts of your fuel system.

⚠ WARNING

- Gasoline is extremely flammable and can be explosive under certain conditions.Turn the engine switch OFF. Do not smoke.Make sure the area is well ventilated and free from any source of flame or sparks;this includes any appliance with a pilot light.Never fill the tank so the fuel level rises into the filler neck.If the tank is overfilled, heat may cause the fuel to expand and overflow through the vent in the fuel tank.

Engine Oil

The following engine oils are recommended.

API Service Classification:SC, SD, SE, SF, SG, or SH.

⚠ WARNING

- After refueling, make sure the tank cap is closed securely.
- If gasoline is spilled on the fuel tank wipe it off immediately.

Oil Viscosity

Choose the viscosity according to the temperature as follows:

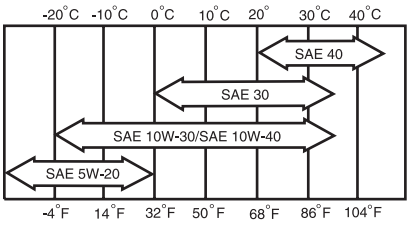

NOTE

- Using multi-grade oils (5W-20, 10W-30, and 10W-40) will increase oil consumption.Check oil level more frequently when using them.

Publication Part Number 103372902
Edition Code 0607B1207A

Manual No. 103372902

Club Car, Inc.
P.O. Box 204658
Augusta, GA 30917-4658
USA

Web www.clubcar.com
Phone 1.706.863.3000
1.800.ClubCar
Intl'l +1 706.863.3000
Fax 1.706.863-5808