Club Car®

Owner's Manual

1995 DS Golf Car Gasoline/Electric

Manual Number 1018053-01

1018053-01

Practice Safety

Safety signs like you see above may at first seem shocking, but their impact is mild compared with the reality of severe personal injury.

Your safety and satisfaction are of the utmost importance to Club Car. That is why we urge you to study this owner's manual, and to read, understand, and heed the warnings in this manual, as well as the safety signs on your vehicle, *before operating the vehicle.*

Take time to understand the language of safety. It is a language that can save your life.

Notice

The Club Car Limited Warranty appears on the pages following this notice, and the Limited Lifetime Fleet Warranty appears on the last pages of this manual. No other warranties, express or implied, are contained herein. Your authorized representative checked this vehicle before it was delivered to you and will provide you with a completed warranty registration card.

Club Car is not liable for errors in this manual or for incidental or consequential damages that result from the use of the material in this manual.

This vehicle conforms to the current American National Standards Institute's Z130 Safety and Performance Requirements for Golf Cars. This standard, which promotes safety in the design, application, and operation of golf cars, defines a golf car as "a vehicle used to convey a person or persons and equipment to play the game of golf in an area designated as a golf course". Throughout this manual, the words "golf car" and "vehicle" are used interchangeably.

This manual contains proprietary information that is protected by copyright. All rights are reserved. No part of this manual may be photocopied, reproduced, or translated to another language without the written consent of Club Car, Inc.

The information contained in this document is subject to change without notice.

Club Car reserves the right to make design changes to either gasoline or electric vehicles without obligation to make these changes on units previously sold.

These vehicles are designed and manufactured for off-road use only. They do not conform to Federal Motor Vehicle Safety Standards or EPA regulations and are not equipped for operation on public streets, roads, or highways.

©1994 Club Car, Inc.

This manual effective August 1, 1994

Manual print code: 0894A00000

CLUB CAR LIMITED THREE (3) YEAR WARRANTY FOR 1995 INDIVIDUAL GOLF CAR IN THE UNITED STATES AND CANADA

1. WARRANTY:

CLUB CAR, INC. ("CLUB CAR") hereby warrants to the original retail purchaser that its new 1995 Model DS golf car purchased from CLUB CAR or an authorized distributor or dealer for use in the United States or Canada shall be free from defects in materials and workmanship under normal use and service as a golf car for the periods stated below, subject to the provisions, limitations, and exclusions contained in this limited warranty.

LIMITED THREE YEAR WARRANTY:

The golf car frame (excluding the front and rear bumper mounts), rack and pinion steering gearbox unit, suspension system (defined as the shock absorbers, shock mounts, A-plate, leaf springs, shackles, and associated hardware), gasoline engine, transmission, torque converter (drive and driven), drive unit, starter generator, and electric motor are warranted with respect to parts and labor against defects in materials and workmanship for a period of three years from the date of purchase.

LIMITED TWO YEAR WARRANTY:

All remaining components of the golf car not specified otherwise are warranted with respect to parts and labor against defects in materials and workmanship for a period of two years from the date of purchase.

This limited warranty covers materials, workmanship, and repair labor cost as to those items specifically listed above for the periods specified. Such repair labor shall be performed only by CLUB CAR, its authorized distributors or dealers, or a service agency approved by CLUB CAR.

IF THE WARRANTY REGISTRATION FORM IS NOT COMPLETED AND RETURNED TO CLUB CAR AT THE TIME OF THE ORIGINAL RETAIL SALE, PURCHASER MUST PROVIDE PROOF OF DATE OF PURCHASE WITH ANY WARRANTY CLAIM.

2. EXCLUSIONS:

Excluded from any CLUB CAR warranty are all optional equipment and accessories, fuses, filters, decals, spark plugs, lubricants, the front body, rear body and trim pieces, seats, routine wear items such as the charger plug and receptacle, brake shoes, belts, brushes, bushings, engine mounts, mats and pads, maintenance adjustments, cosmetic deterioration, items which deteriorate or fail due to exposure or ordinary wear and tear. Batteries and the battery charger are covered by separate Club Car warranties. Tires are warranted by their manufacturer. Also excluded from any CLUB CAR warranty is damage to a golf car or component resulting from a cause other than a defect including unreasonable or unintended strain or use, improper installation of accessories, installation of parts or accessories that are not original equipment, overloading, accident, alteration, abuse, or neglect.

Transportation expenses for warranty service are also excluded from this warranty.

3. VOIDING OF WARRANTY:

THIS AND ANY OTHER WARRANTY SHALL BE VOID IF THE GOLF CAR IS ABUSED OR USED IN AN UNINTENDED MANNER OR SHOWS INDICATIONS THAT IT HAS BEEN ALTERED IN ANY WAY, INCLUDING, BUT NOT LIMITED TO, MODIFICATION OF THE SPEED GOVERNOR, BRAKING SYSTEM, STEERING, DRIVE UNIT, OR OTHER OPERATING SYSTEMS OF THE CAR TO CAUSE IT TO PERFORM OUTSIDE CLUB CAR SPECIFICATIONS. THE WARRANTY IS LIKEWISE VOID IF THE CAR SHOWS INDICATIONS THAT REASONABLE OR NECESSARY MAINTENANCE AS OUTLINED IN THE OWNER'S MANUAL AND MAINTENANCE AND SERVICE MANUAL WAS NOT PERFORMED AT THE TIME AND IN THE MANNER SPECIFIED IN SUCH MANUALS.

4. SOLE REMEDY:

CLUB CAR's only liability under this limited warranty, or in any action, whether based upon warranty, contract, negligence, strict product liability, or otherwise, is limited to the repair or replacement, at CLUB CAR's option, of a golf car or component thereof that CLUB CAR deems to be defective. Replacement shall mean furnishing, during the applicable limited warranty period, a new golf car or factory reconditioned vehicle or component thereof which is identical or reasonably equivalent to the warranted product or component at no cost to the purchaser. Repair shall mean remedying a defect in the golf car or component thereof at no cost to the purchaser during the applicable limited warranty period. If CLUB CAR elects to repair

the golf car, it may provide factory reconditioned parts or components. All parts and components replaced under warranty shall become the property of CLUB CAR.

5. HOW TO MAKE A WARRANTY CLAIM:

To make a warranty claim under this limited warranty, you must present the golf car or defective component to an authorized CLUB CAR distributor or dealer or send the defective component, freight prepaid, to WARRANTY ADMINISTRATION, CLUB CAR, INC., 4152 Washington Road, P.O. Box 204658, Augusta, Georgia 30917-4658.

6. DISCLAIMER:

THIS LIMITED WARRANTY IS EXCLUSIVE. CLUB CAR MAKES NO OTHER WARRANTY OF ANY KIND, EXPRESS OR IMPLIED. ANY IMPLIED WARRANTIES OF MERCHANTABILITY OR FITNESS FOR A PARTICULAR PURPOSE WHICH EXCEED THE OBLIGATIONS OR TIME LIMITS STATED IN THIS WARRANTY ARE HEREBY DISCLAIMED BY CLUB CAR AND EXCLUDED FROM THIS WARRANTY. THE PURCHASER AND CLUB CAR EXPRESSLY AGREE THAT THE REMEDY OF REPLACEMENT OR REPAIR OF THE DEFECTIVE GOLF CAR OR COMPONENT THEREOF IS THE EXCLUSIVE AND SOLE REMEDY OF THE PURCHASER. CLUB CAR MAKES NO OTHER REPRESENTATION OR WARRANTY OF ANY KIND, AND NO REPRESENTATIVE, EMPLOYEE, DISTRIBUTOR OR DEALER OF CLUB CAR HAS THE AUTHORITY TO MAKE OR IMPLY ANY REPRESENTATION, PROMISE OR AGREEMENT WHICH IN ANY WAY VARIES THE TERMS OF THIS WARRANTY.

7. NO CONSEQUENTIAL DAMAGES:

IN NO EVENT SHALL CLUB CAR BE LIABLE FOR ANY INCIDENTAL OR CONSEQUENTIAL DAMAGES INCLUDING, BUT NOT LIMITED TO, LOSS RELATED TO PROPERTY OTHER THAN THE GOLF CAR, LOSS OF USE, LOSS OF TIME, INCONVENIENCE, OR ANY OTHER ECONOMIC LOSS.

Some states allow neither limitation on the duration of an implied warranty nor exclusions or limitation of incidental or consequential damages. Therefore, the above limitations or exclusions may not apply to you.

This warranty gives you specific legal rights, and you may also have other rights which vary from state to state.

8. INFORMATION:

For further information contact WARRANTY ADMINISTRATION, CLUB CAR, INC., P.O. Box 204658, Augusta, Georgia 30917-4658, U.S.A., 706-863-3000.

9. WARNING:

Any modification or alteration of any golf car beyond factory specifications, including those that affect the weight distribution, stability, or speed of the golf car, can cause serious personal injury or death.

Foreword

Thank you for choosing Club Car. Whether you have chosen the DS Gasoline or DS Electric, you have chosen the finest golf car on the market-- the golf car most widely recognized as the industry leader in vehicle efficiency and long-lasting value. Please protect your investment and ensure that your Club Car provides years of reliable, superior performance by returning your Warranty Registration (provided by your distributor/dealer), and by reading and following the maintenance instructions in this manual.

Your comfort and safety are important to us as well, so we urge you to read and follow the step-by-step operating instructions and safety procedures in this manual. These instructions must be followed in order to avoid the risk of severe personal injury. If you rent or loan your vehicle to others, we recommend that you ask them to read this manual before they operate the vehicle.

Club Car products are backed by a customer support system designed to offer you fast, courteous service. In the event that your golf car needs repairs or services, we recommend that your local authorized Club Car representative perform them. For the name and address of the Club Car representative nearest you, call 706-863-3000, Ext. 261. If you would prefer to write to us, direct your letter to: Club Car, Attention: Product Development Department, P.O. Box 204658, Augusta, Ga. 30917-4658 USA. Your local authorized Club Car representative can also provide technical advice, parts, and service manuals.

We hope you will consider this owner's manual a permanent part of your golf car. If you sell the vehicle, please include the manual so that the next owner will have the important operating, safety, and maintenance information it contains.

Table of Contents:

Safety Details 1
Vehicle Feature Identification 4
Model Identification 8
Safety Committee 9
Pre-Operation Checklist 9
Controls 11
Driving Instructions 18
Towing 21
Transporting on a Trailer 22
Storage - Gasoline Vehicle 23
Storage - Electric Vehicle 26
Maintenance 27
Periodic Service Schedule 30
Periodic Lubrication Schedule - Gasoline Vehicles 32
Periodic Lubrication Schedule - Electric Vehicles 34
Capacities 36
Engine Oil - Gasoline Vehicle 37
Fueling Instructions 38
Battery - Gasoline Vehicle 39
Battery - Electric Vehicle 41

Table of Contents

Battery Charger - Electric Vehicle 43
Cleaning 49
Vehicle Controllers 49
Accessories and Options 50
Subsequent Owner Registration 51
Fairway Villager 51
Vehicle Specifications 54

Safety Details:

⚠ WARNING

- THIS OWNER'S MANUAL SHOULD BE READ COMPLETELY BEFORE ATTEMPTING TO DRIVE OR SERVICE THE VEHICLE. Failure to follow the instructions in this manual could result in severe personal injury, property damage or death.

It is important to note that some vital statements throughout this manual and on the labels affixed to the vehicle are preceded by the words DANGER, WARNING, CAUTION, or NOTE. For your protection, we recommend that you take special notice of these safety procedures. Safety procedures are essential and must be followed.

Throughout this manual and on the labels affixed to the vehicle, the words "golf car" and "vehicle" are used interchangeably. "Golf car" is defined in the Notice of this manual and no other representation is stated or implied.

If any of the labels on the vehicle become damaged, have been removed or cannot be easily read they should be replaced immediately to avoid possible personal injury, property damage, or death. Contact your CLUB CAR distributor/dealer.

⚠ DANGER

- A DANGER INDICATES AN IMMEDIATE HAZARD WHICH WILL RESULT IN SEVERE PERSONAL INJURY OR DEATH.

⚠ WARNING

- A WARNING INDICATES AN IMMEDIATE HAZARD WHICH COULD RESULT IN SEVERE PERSONAL INJURY OR DEATH.

⚠ CAUTION

- A CAUTION INDICATES HAZARDS OR UNSAFE PRACTICES WHICH COULD RESULT IN PRODUCT OR PROPERTY DAMAGE OR MINOR PERSONAL INJURY.

NOTE

- A note provides key information to make procedures more easily understood.

The safety procedures listed must be followed whenever the vehicle is being repaired or serviced. Other specific warnings appear throughout this manual and on the vehicle.

⚠ DANGER

- GASOLINE VAPORS - FLAMMABLE - EXPLOSIVE - DO NOT SMOKE. Keep sparks and flames away from the area of the vehicle. Service only in well-ventilated areas.
- BATTERY VAPORS - FLAMMABLE - EXPLOSIVE - DO NOT SMOKE. Keep sparks and flames away from the area of the vehicle. Service only in well-ventilated areas.
- DO NOT OPERATE IN AN ENCLOSED AREA WITHOUT PROPER VENTILATION. Engine produces carbon monoxide which is an odorless, deadly poison.
- A GOLF CAR WILL *NOT* PROVIDE PROTECTION FROM LIGHTNING, FLYING OBJECTS, OR OTHER STORM RELATED HAZARDS. If caught in a storm while driving a golf car, exit the vehicle and seek shelter in accordance with safety guidelines applicable to your location.

⚠ WARNING

- ONLY TRAINED TECHNICIANS SHOULD REPAIR OR SERVICE THE VEHICLE. Anyone doing even simple

WARNING CONTINUED:

repairs or service should follow the correct procedures and obey the warnings listed in this manual as well as those in the maintenance and service manual.

- ALWAYS WEAR SAFETY GLASSES OR EYE PROTECTION WHEN SERVICING THE VEHICLE.
- TURN KEY SWITCH TO "OFF", REMOVE KEY, BLOCK TIRES, PLACE FORWARD/REVERSE LEVER IN "NEUTRAL" AND DISCONNECT BATTERY(IES) PRIOR TO SERVICING. (Figures 1 and 2)
- ALWAYS USE INSULATED TOOLS WHEN WORKING AROUND BATTERIES OR ELECTRICAL CONNECTIONS.
- IMPROPER USE OF THE VEHICLE, OR FAILURE TO PROPERLY MAINTAIN IT, COULD RESULT IN DECREASED VEHICLE PERFORMANCE OR SEVERE PERSONAL INJURY.
- ANY MODIFICATION OR CHANGE TO THE VEHICLE WHICH AFFECTS THE STABILITY OR INCREASES THE SPEED BEYOND THE FACTORY SPECIFICATIONS COULD RESULT IN SEVERE PERSONAL INJURY OR DEATH.

Figure 1

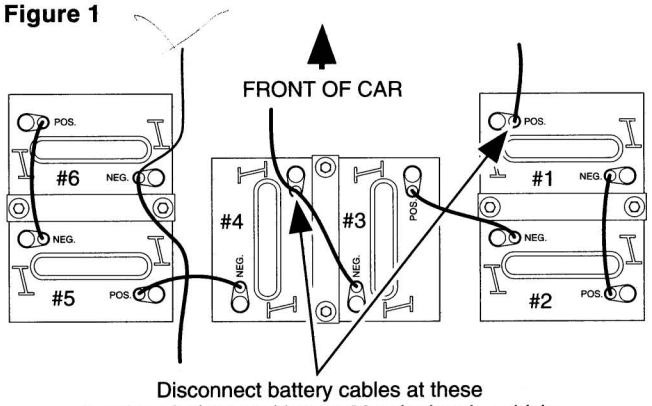

Disconnect battery cables at these locations before working on 36 volt electric vehicle

Figure 2

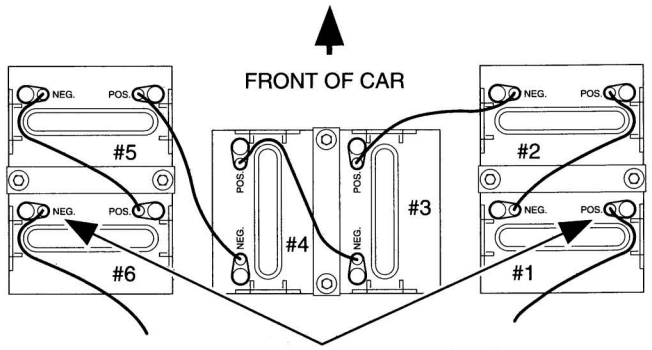

Disconnect battery cables at these locations before working on PowerDrive System 48 electric vehicle

DS Gasoline Vehicle Feature

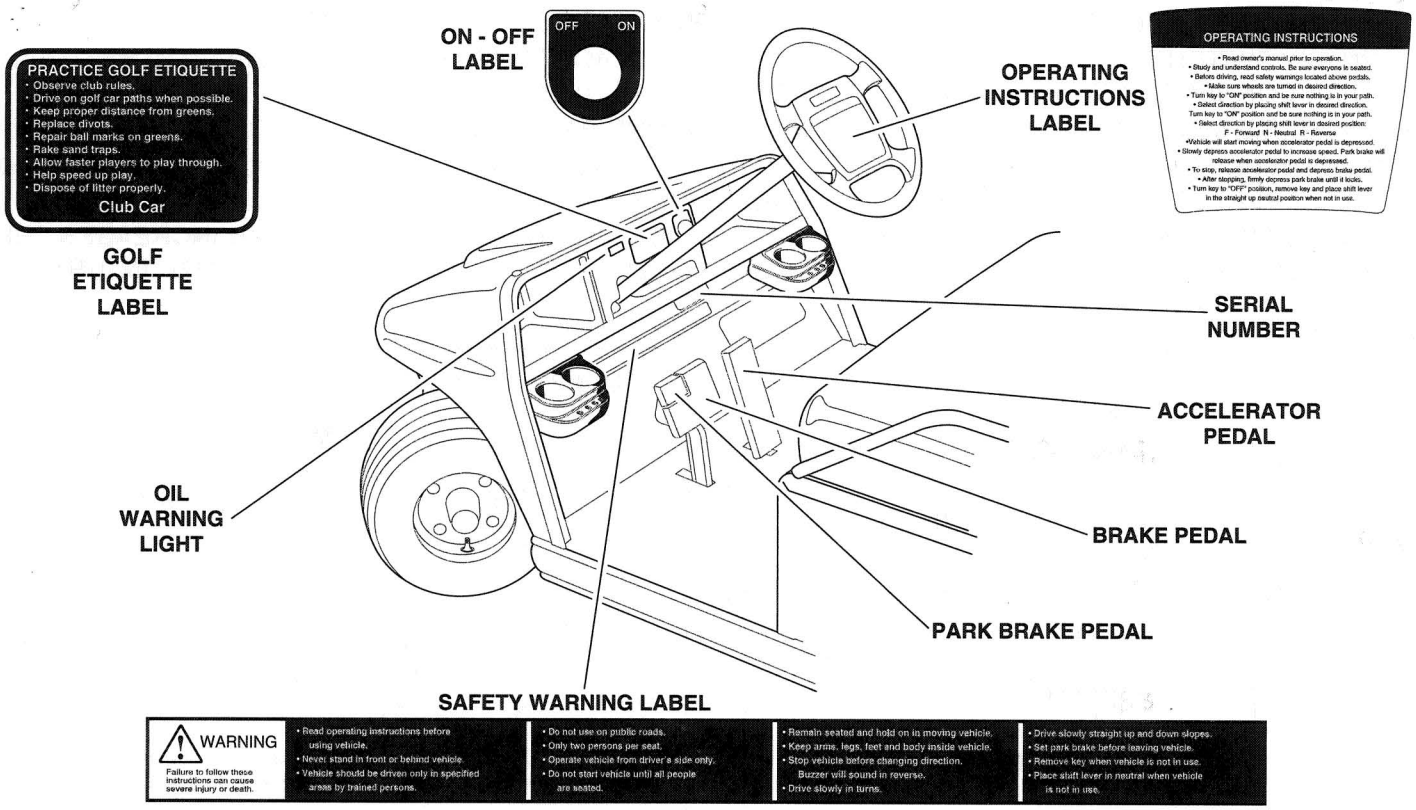

Identification

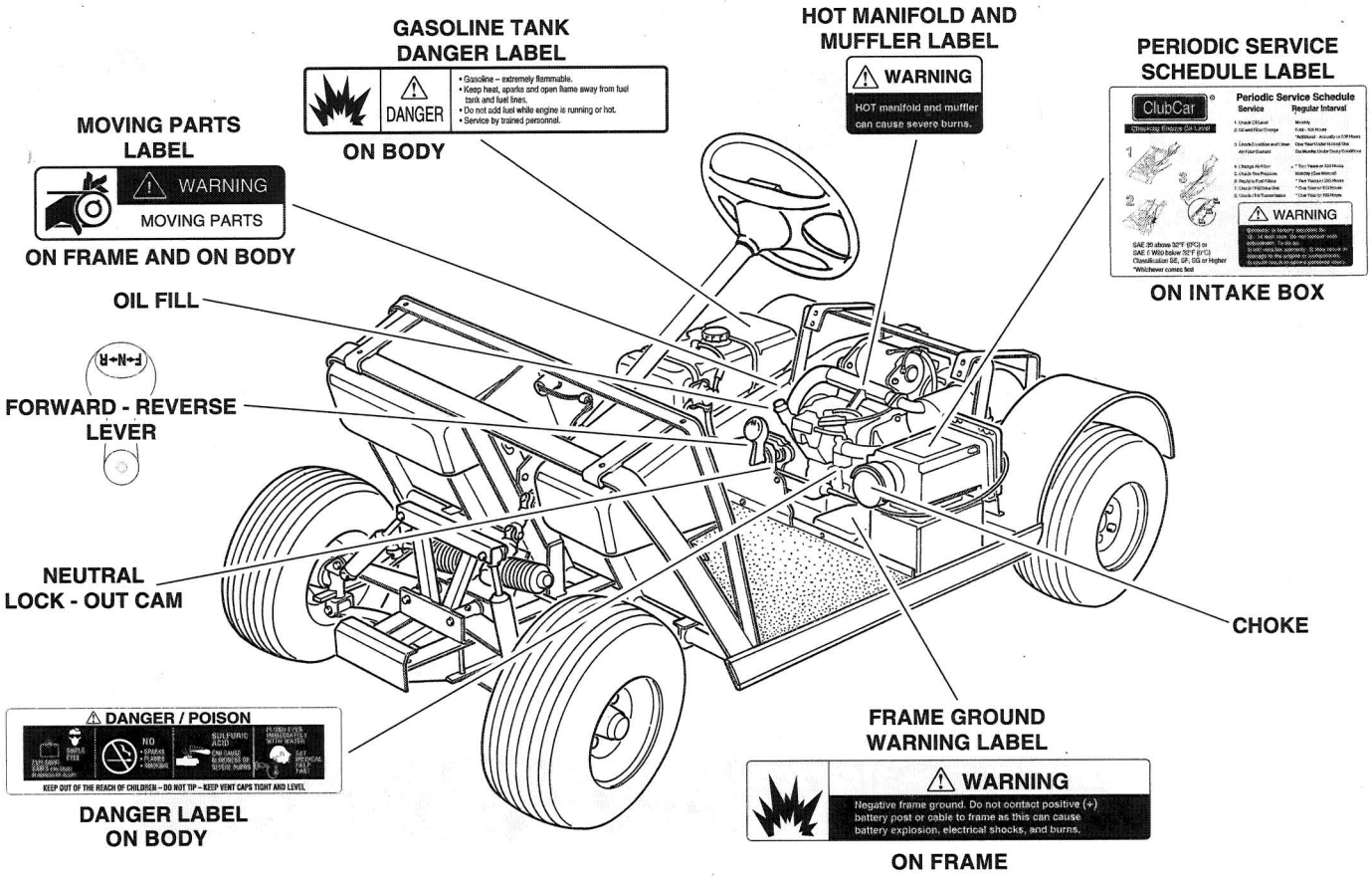

DS Electric Vehicle Feature

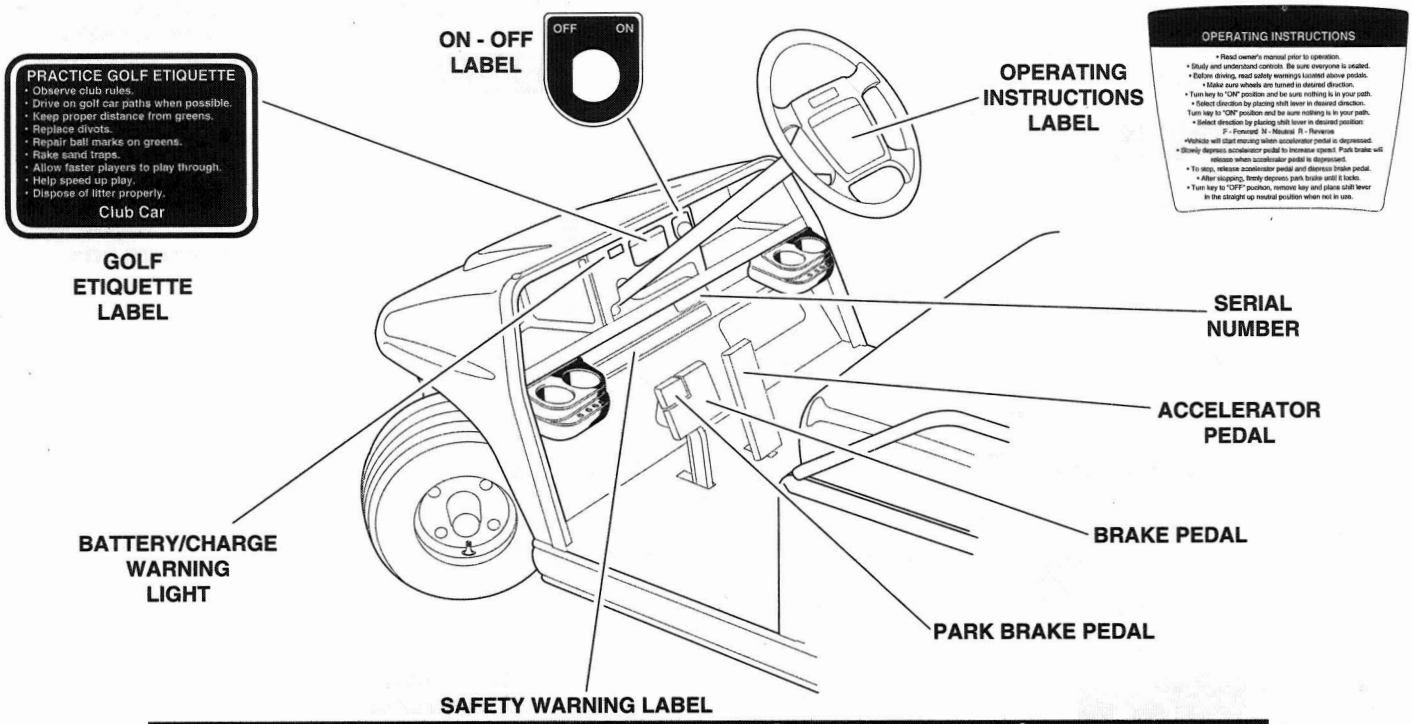

Identification

DANGER LABEL
ON BODY

RESISTOR WARNING
LABEL
(36v V-GLIDE ONLY)

ON BODY UNDER SEAT

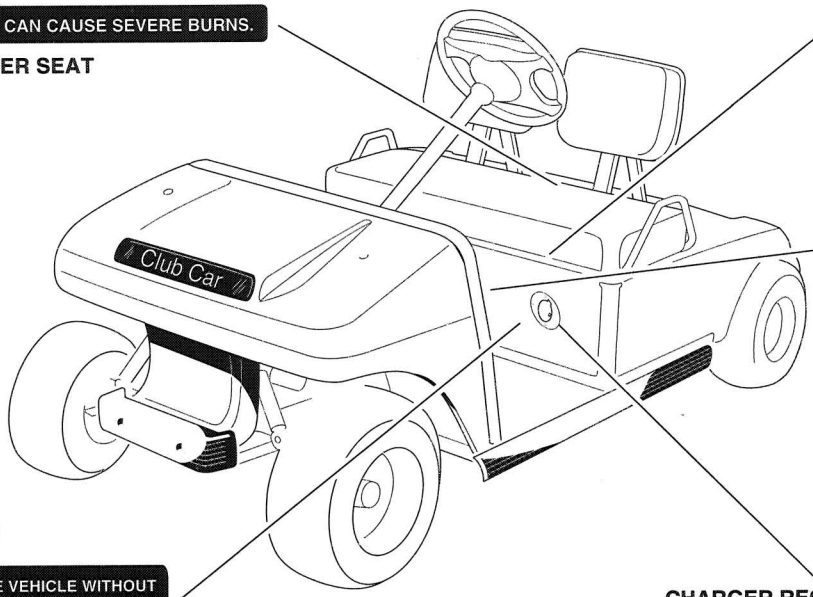

FORWARD - REVERSE
LEVER

SPEED SWITCH
CAUTION LABEL
ON SPEED SWITCH CASE

CHARGER RECEPTACLE

Model Identification:

The serial number of your CLUB CAR is stamped on the data plate mounted on the frame directly above the accelerator pedal (Example: A9501-123456 for Electric or AG9501-123456 for Gasoline) (See Figure 3).

NOTE

- Always mention this number when ordering parts or making inquiries. If this vehicle is equipped as a Fairway Villager four-passenger vehicle, read the special instructions on Pages 51-52.

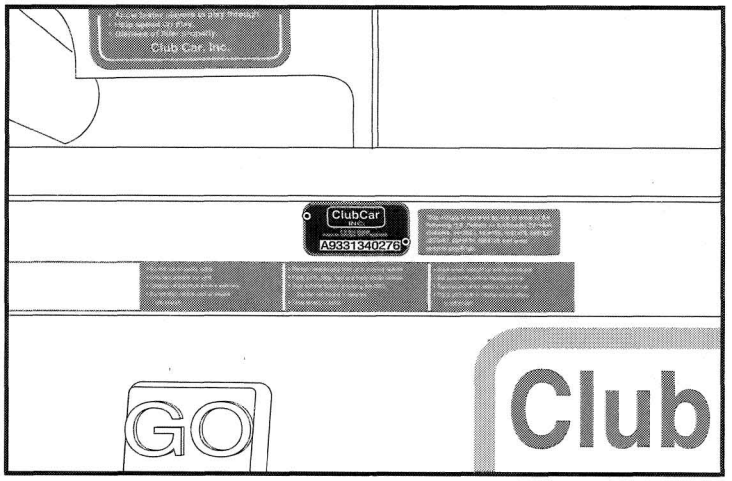

Figure 3

Safety Committee:

If the golf car is to be rented or is part of a fleet, we strongly recommend that a safety committee be appointed. One of the main concerns of this committee should be the safe operation of the golf cars.

This should include at a minimum:

- Where golf cars should be driven.
- Who should and who should not drive golf cars.
- Instructing first time drivers.
- Maintaining golf cars in a safe driving condition.
- How various rules are to be enforced.

The safety committee should include all these items and such others as the committee feels necessary or appropriate.

Pre-Operation Checklist:

Your CLUB CAR has been thoroughly inspected and adjusted at the factory, and also by your CLUB CAR distributor/ dealer. However, upon arrival of your new CLUB CAR(s), you should become familiar with its controls and operation, and carefully inspect each vehicle to be satisfied that it is in proper working condition before accepting delivery.

Use the following checklist as a guide to inspect your new vehicle. Any problems should be corrected only by your CLUB CAR distributor/dealer or a trained mechanic.

- **General**: All the parts should be in place and properly installed. Be sure that all nuts, bolts, and screws are tight. On the DS Gasoline vehicle, check all hose clamps for tight fit as well as the starter belt for tightness.
- **Warning Labels**: Check to ensure that all warning and operation labels are in place. (See Pages 4-7)
- **Tires**: Check for proper tire pressure. (See Capacities, Page 36)
- **DS Electric Batteries** (all models): Check electrolyte to ensure that it is at its proper level. (See Figure 20, Page 40)

Check battery posts. Wires should be tight and free of corrosion. **Charge batteries fully before first use of vehicle.**

- **DS Electric Speed Switch**: Be sure speed switch cover is properly secured prior to operating the vehicle.
- **DS Gasoline Engine**: Check for proper engine oil level. (See Engine Oil, Page 37)
- **DS Gasoline Fuel**: Check fuel level. (See Fueling Instructions, Page 38)

⚠ WARNING

- BE SURE THE PLASTIC HAS BEEN REMOVED FROM THE SEAT BOTTOM BEFORE OPERATING VEHICLE. Failure to do so may result in a fire, property damage, personal injury, or death.

PERFORMANCE INSPECTION:

After you have familiarized yourself with the vehicle's controls, and have read and understood the driving instructions, take the vehicle for a test drive. Check the following:

- **Brakes**: Be sure that the brakes function properly. Both rear wheels should brake simultaneously. The pedal should not go more than halfway to the floor. If it does, have the brakes adjusted.
- **Park Brake**: The park brake should lock the wheels when latched, and should release when either the accelerator or brake pedal is depressed.
- **Steering**: The vehicle should be easy to steer and should not have any play in the steering wheel.
- **Accelerator**: As the accelerator pedal is depressed, the engine or motor should start and the vehicle should come up smoothly to full speed. When the pedal is released it should return to the original position and the engine or motor should stop. The DS Electric vehicle runs at reduced speed in reverse.
- **DS Gasoline Governor**: Check the speed of the vehicle. The vehicle should run at 19-24 KPH (12-15 MPH) on a level surface.
- **General**: Listen for any unusual noises such as squeaks or rattles. Check the vehicle's ride and performance. Have a CLUB CAR distributor/dealer or a trained mechanic investigate anything unusual.

Controls:

⚠ DANGER

- DO NOT OPERATE GASOLINE VEHICLE IN AN ENCLOSED AREA WITHOUT PROPER VENTILATION. Gasoline engines produce carbon monoxide gas, which is an odorless, deadly poison.

⚠ WARNING

- IF RENTING OR LOANING THE VEHICLE, MAKE SURE THE DRIVER IS FAMILIAR WITH ALL CONTROLS AND OPERATING PROCEDURES BEFORE ALLOWING THE VEHICLE TO BE DRIVEN.
- DO NOT TAMPER WITH THE GASOLINE VEHICLE'S GOVERNOR. Doing so will void the warranty, as well as damage the engine and other components, and could result in property damage, personal injury, or death due to unsafe speeds.
- DO NOT MODIFY OR CHANGE THE VEHICLE IN ANY WAY WHICH MAY AFFECT THE STABILITY OR INCREASE THE SPEED BEYOND FACTORY SPECIFICATIONS. Property damage, personal injury, or death could result.
- DO NOT SHIFT FORWARD/REVERSE LEVER WHILE THE VEHICLE IS IN MOTION. To avoid injury to an unsuspecting passenger or damage to the vehicle, always bring the vehicle to a full stop before shifting lever. Buzzer will sound as a warning when the vehicle is in reverse.
- DEPRESS THE BRAKE PEDAL FIRMLY UNTIL STOPPED. SET THE PARK BRAKE, TURN KEY SWITCH "OFF", AND REMOVE THE KEY WHEN LEAVING THE VEHICLE TO AVOID UNINTENTIONAL STARTING OR ROLLING OF THE VEHICLE.

Key Switch -

The key switch is mounted on the dash to the right of the steering column (See Figure 4). It has two (2) positions, "OFF" and "ON", which are clearly labeled.

NOTE

- Key is removable in the "OFF" position only.

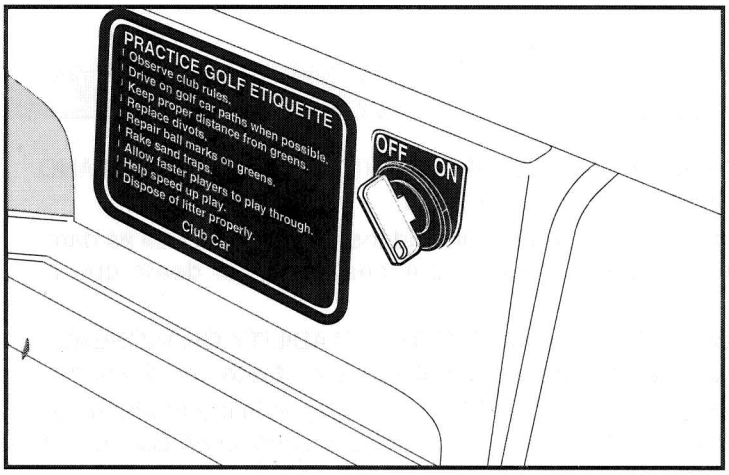

Figure 4

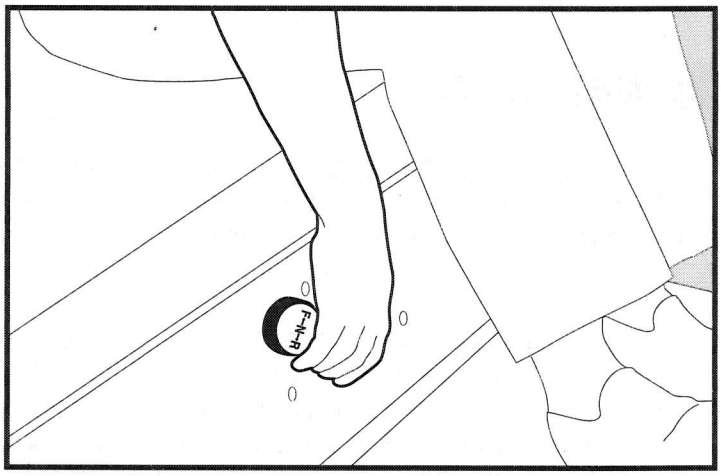

Figure 5

Forward/Reverse Control -

The forward/reverse shift lever is located below and to the right of the driver's right knee on the seat support panel (See Figure 5). The lever has three (3) distinct positions: F (forward), N (neutral), and R (reverse). Rotate the lever towards

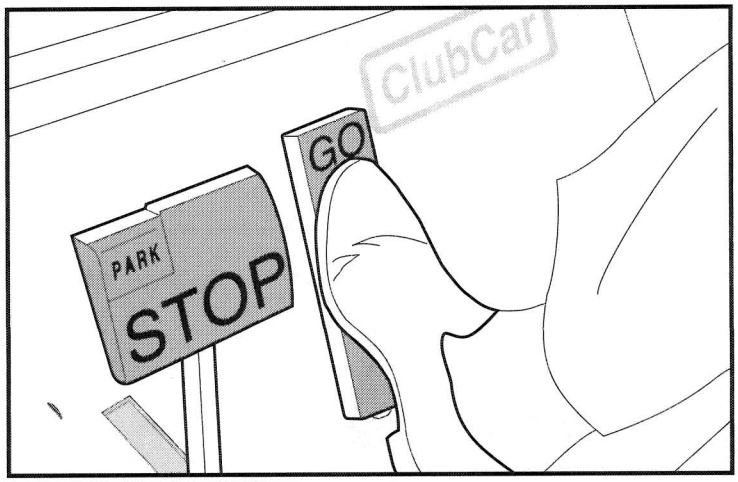

Figure 6

the driver, F (forward), to run the vehicle in the forward direction, or towards the passenger, R (reverse), to run the vehicle in reverse. When the lever is in the straight up, or N (neutral) position, the vehicle will not run. The engine on the DS Gasoline will stop if it is shifted to this position while running. The DS Electric vehicle operates at reduced speed in reverse.

NOTE

- The reverse buzzer will sound as a warning when the vehicle is in reverse.

Accelerator Pedal -

The accelerator pedal is the pedal on the right, with the word GO molded into it. (See Figure 6)

NOTE

- **The operation of the accelerator pedal differs from that of an automobile.**
  When the key switch is "ON", and the shift lever is in either forward or reverse, depressing the accelerator pedal will *automatically release the park brake* and start the vehicle moving in the direction selected (forward or reverse). As the accelerator pedal is depressed, speed will increase until full speed is reached. When the accelerator is released, power will be cut off and the ~~engine or~~ motor will stop running.

Brake Pedal -

The brake pedal is the large pedal on the left with the word STOP molded into it (See Figure 7, Page 14). To slow or stop the vehicle, depress the brake pedal with your right foot.

⚠ WARNING

- THE PARK BRAKE WILL RELEASE AUTOMATICALLY WHEN EITHER THE ACCELERATOR OR BRAKE PEDAL IS DEPRESSED. The park brake has multiple locking positions and should be firmly pressed to prevent the vehicle from rolling.

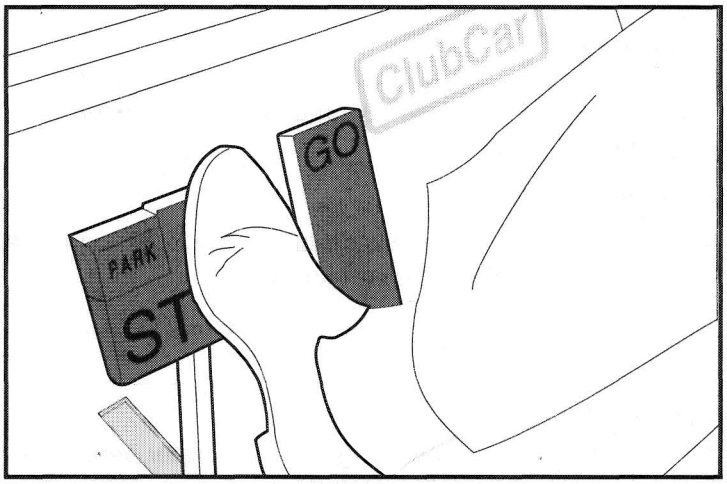

Figure 7

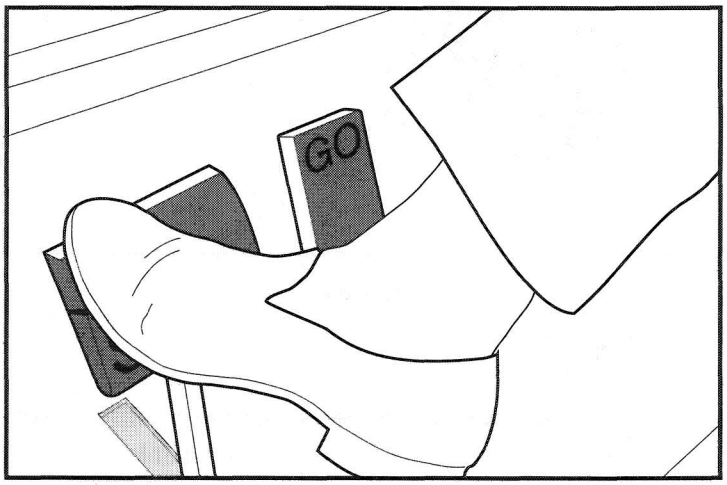

Figure 8

Park Brake Pedal -

The park brake pedal is the small raised portion in the upper left corner of the brake pedal. It has the word PARK molded into it and the words PARK BRAKE marked on top of it (See Figure 7). To set the park brake, depress the brake pedal firmly and tilt the park brake portion of the pedal forward with your foot (See Figure 8).

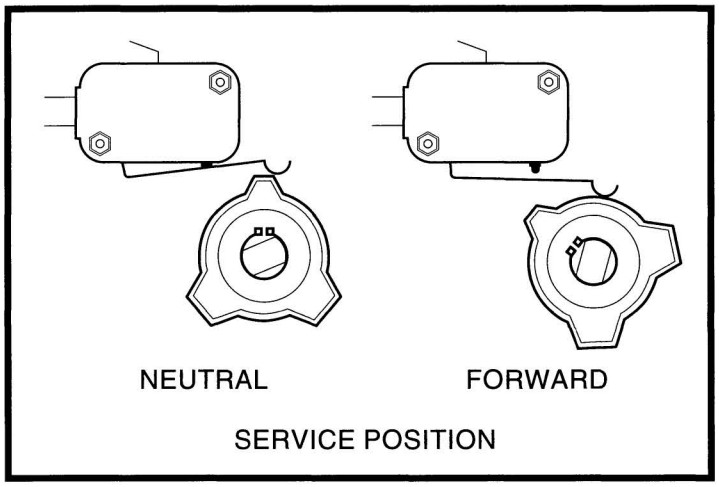

Figure 9

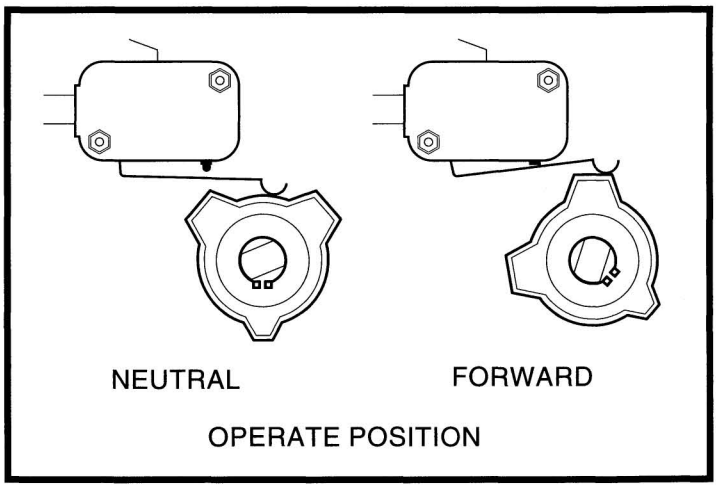

Figure 10

GASOLINE VEHICLE ONLY:

Neutral Lock-out -

The vehicle has a neutral lock-out circuit that prevents the driver from starting the vehicle in "NEUTRAL". If the vehicle is started in forward or reverse and then shifted to neutral, the engine will stop running.

For the convenience of the trained mechanic, there is a neutral lock-out cam located on the back of the forward/reverse lever. If the neutral lock-out cam is pulled out approximately 10 millimeters (3/8 inch) and then rotated one-half turn until it snaps into place, the vehicle will be in the SERVICE position (See Figure 9). This will allow the mechanic to run the engine in NEUTRAL for certain maintenance procedures. With the cam in this position, the vehicle will not operate if the forward/reverse lever is placed in either the forward or reverse position. To put the vehicle back into the OPERATE position, pull the cam out approximately 10 millimeters (3/8 inch) and rotate it one-half turn until it snaps into place (See Figure 10).

NOTE

- Be sure to return the cam to the OPERATE position after servicing the vehicle, or it will not run with the direction selector in either the forward or reverse position.

⚠ WARNING

- WITH THE CAM IN THE SERVICE POSITION AND THE ENGINE RUNNING, THE VEHICLE MAY MOVE SUDDENLY IF THE FORWARD/REVERSE LEVER IS SHIFTED OR ACCIDENTALLY BUMPED. To prevent this, block the front and rear tires and always firmly set the park brake before servicing or leaving the vehicle.

Choke -

The choke is located on the seat support panel below and to the left of the driver's left knee (See Figure 11, Page 17). If the vehicle is hard to start in cool or cold temperatures, simply push in the choke cover with your left hand to activate it. Hold it during start up and release the choke cover after the engine starts and runs smoothly.

Oil Light -

The DS Gasoline golf car is equipped with a low oil warning light, located on the dash panel just above the steering column (See Figure 12, Page 17). If the oil warning light comes on, oil should be added to the engine before continuing to use the vehicle. The vehicle should never be driven with the oil warning light remaining on. If the oil warning light goes on and off, you may proceed, but oil should be added at the first opportunity. If the oil level is correct and the light stays on, have a trained mechanic check the vehicle.

⚠ WARNING

- FAILURE TO ADD OIL IMMEDIATELY WHEN OIL WARNING LIGHT STAYS ON MAY RESULT IN PERMANENT ENGINE DAMAGE.

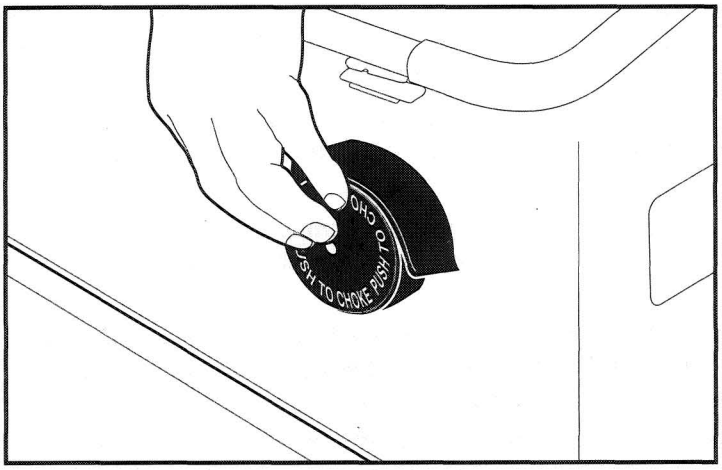

Figure 11

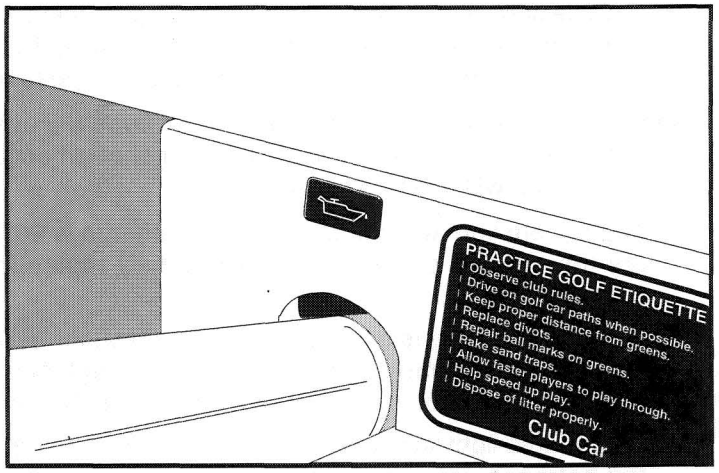

Figure 12

POWERDRIVE™ SYSTEM 48 ELECTRIC VEHICLES ONLY:

Battery/Charging Trouble Light -

The PowerDrive System 48 vehicle features a dash mounted warning light (above steering column) that, when the vehicle is in operation, indicates low battery voltage, or, when the vehicle is being charged, indicates a charging problem. The battery trouble light is controlled by the PowerDrive System 48 on-board computer.

When the vehicle is in operation, the trouble light will come on and remain illuminated if:

- Batteries voltage drops below 48 when there is no load on the batteries (the vehicle is stopped and there are no accessories on).
- Batteries have discharged to less than 25% of rated capacity.

If the trouble light comes on during a round of golf, there is enough power remaining to finish the round, but the car should be charged before being used again. If the trouble light comes on and the vehicle is unable to finish the round, have your Club Car distributor/dealer check the vehicle for a possible battery or electrical system problem.

When the batteries receive an incomplete charge because 1) the DC power cord is disconnected, 2) AC power to the charger is interrupted, 3) automatic charger shut-off occurs after 16 hours of operation, or 4) the charger malfunctions, the trouble light will indicate as follows:

- The trouble light will not come on if the charge is 90% or more complete. The on-board computer will retain in memory the amount of charge needed to fully replenish the batteries and will complete the charge during the next charge cycle.
- When the charger is unplugged, the trouble light will come on and remain illuminated for 10 seconds if the charge is less than 90% complete but the car has enough power to complete 36 holes of golf. This will alert the fleet operator that the car may be used, but that it must be charged to completion as soon as possible.
- The trouble light will come on and remain illuminated if the charger times out at 16 hours (see charger manual) and the batteries are not sufficiently charged. This indicates an abnormal charge cycle. The charger and batteries should be checked by your Club Car distributor/dealer.
- The trouble light will come on during a charge cycle (DC plug is still connected) if AC power to the charger is interrupted. The light will go out when AC power is restored.

Driving Instructions:

⚠ WARNING

- IF RENTING OR LOANING THE VEHICLE, MAKE SURE THE DRIVER IS FAMILIAR WITH ALL CONTROLS AND OPERATING PROCEDURES BEFORE ALLOWING THE VEHICLE TO BE DRIVEN.
- NO MORE THAN TWO PEOPLE SHOULD BE ON THE VEHICLE AT ONE TIME.

WARNING CONTINUED:

- THE VEHICLE IS NOT SPECIALLY EQUIPPED FOR HANDICAPPED PERSONS. Be sure all persons can properly operate vehicle prior to allowing them to drive the vehicle.
- FOR NIGHT USE, VEHICLE MUST BE EQUIPPED WITH HEADLIGHTS, TAILLIGHTS, AND REFLECTORS.
- STOP VEHICLE BEFORE SHIFTING THE FORWARD/REVERSE LEVER. Failure to do so may result in injury to an unsuspecting passenger and (or) damage to the vehicle. Buzzer will sound as a warning when the vehicle is in reverse.

WHEN DRIVING THE VEHICLE:

- OPERATE THE VEHICLE FROM THE DRIVER'S SEAT ONLY.
- REMAIN SEATED IN A MOVING VEHICLE AND HOLD ON TO SEAT HANDLES OR HANDRAILS AT ALL TIMES TO PREVENT FALLS.
- KEEP ALL BODY PARTS INSIDE THE VEHICLE TO PREVENT THEM FROM GETTING CAUGHT BETWEEN THE VEHICLE AND THE GROUND OR OTHER OBJECTS.
- DRIVE SLOWLY IN TURNS AND DRIVE STRAIGHT UP OR DOWN SLOPES TO PREVENT OVERTURNING OF THE VEHICLE.
- AVOID SUDDEN STARTS, STOPS AND ABRUPT TURNS TO AVOID INJURY TO AN UNSUSPECTING PASSENGER AND (OR) DAMAGE TO THE VEHICLE.
- TO AVOID THE POSSIBILITY OF LOSING CONTROL OF OR OVERTURNING THE VEHICLE, REDUCE SPEED FOR ADVERSE DRIVING CONDITIONS SUCH AS WET GRASS OR ROUGH TERRAIN.
- DO NOT USE ON PUBLIC ROADS. The vehicle is not designed or intended for street use and should not be licensed for use on public roads.
- OBEY ALL LOCAL RULES CONCERNING GOLF CARS.
- THE VEHICLE SHOULD ONLY BE DRIVEN IN SPECIFIED AREAS BY TRAINED PEOPLE.
- TO AVOID BEING STRUCK, DO NOT STAND IN FRONT OF OR BEHIND VEHICLE.
- DO NOT DRIVE WHILE UNDER THE INFLUENCE OF ALCOHOL, DRUGS, OR MEDICATIONS.

No one should drive the vehicle without first being instructed in the proper operation and use of the vehicle's controls. An experienced operator should accompany each first-time driver on a test drive before allowing him(her) to operate the vehicle alone. Only licensed drivers should be allowed to drive this vehicle.

To ensure safe operation of the vehicle, follow exactly and in order, all of the procedures listed below. Read and understand all instructions prior to driving the vehicle.

Starting the vehicle:

1. Enter the vehicle.
2. Study and understand controls.
3. Be sure everyone is seated and holding onto seat handles or handrails.
4. Read safety warnings located above pedals.
5. Make sure wheels are turned in desired direction.
6. Turn key to "ON" position and be sure nothing is in your path.
7. Select direction by placing shift lever in desired position (F = forward or R = reverse).
8. Slowly depress accelerator pedal. The park brake will release automatically and the vehicle will start to move. As the accelerator pedal is depressed, speed will increase until full speed is reached.

NOTE

- Operator must control speed when going downhill.
- **Gasoline Vehicle Only**: Depress both accelerator and brake when descending a hill. The engine governor will cause the engine to control downhill speed.

Stopping the vehicle:

To stop the vehicle, release the accelerator pedal and depress the brake pedal with your right foot until the vehicle comes to a complete stop.

⚠ WARNING

- DRIVING THROUGH WATER MAY AFFECT THE BRAKES. Check their effectiveness by depressing the brake pedal gently. If the vehicle does not slow down at the normal rate, continue to depress the brakes until they dry out and normal performance returns.

⚠ CAUTION

- WHEN STOPPED ON A HILL, USE THE BRAKE PEDAL TO HOLD YOUR POSITION. DO NOT USE THE ACCELERATOR PEDAL.

Parking and leaving the vehicle:

1. After stopping the vehicle, firmly depress the park brake pedal until it locks. This will prevent the vehicle from rolling.
2. Place shift lever in the straight up "NEUTRAL" position and turn key to "OFF". This prevents unintentional starting of the vehicle. Remove the key when the vehicle is not in use.

Towing

⚠ WARNING

- NEVER TOW THE VEHICLE ON PUBLIC STREETS OR HIGHWAYS.
- USE ONLY APPROVED CLUB CAR TOW BARS.
- TURN KEY SWITCH TO OFF AND PLACE SHIFT LEVER IN NEUTRAL BEFORE TOWING VEHICLE.

⚠ WARNING

- EXTREME CAUTION SHOULD BE USED WHEN TOWING ANY VEHICLE.
- DO NOT EXCEED 8 KPH (5 MPH) TOWING SPEED.
- DO NOT ALLOW PEOPLE IN THE VEHICLES BEING TOWED.
- DO NOT TOW MORE THAN ONE (1) VEHICLE WITH ANOTHER CLUB CAR. If more than one vehicle must be towed, a properly fitted vehicle with a tow hitch height of 11 inches should be used. Only heavy-duty tow bars should be used for multi-vehicle towing. Never tow more than ~~five (5)~~ 1 vehicles at one time.
- AVOID SUDDEN STARTS, STOPS, AND TIGHT TURNS WHEN TOWING.

All vehicles are equipped with both front and rear tow bar attaching points. A light duty tow bar is available for break-down towing and single vehicle towing. A heavy duty tow bar and an on-board tow bar are available for multi-vehicle towing. Observe all of the above warnings when towing.

Transporting on a Trailer:

If your vehicle must be transported over long distances or on public highways, it should be done on an approved trailer observing all the following warnings:

⚠ WARNING

- FOR USE ON PUBLIC ROADS, THE TRAILER MUST MEET ALL FEDERAL, STATE AND LOCAL REQUIREMENTS SUCH AS TAILLIGHTS, BRAKE LIGHTS, ETC.
- ALWAYS USE AN APPROVED TRAILER THAT HAS A LOAD RATING OF 544 kg. (1200 lbs.) PER VEHICLE (Example: A 2-car trailer should be rated at 2 x 544 = 1088 kg (2 x 1200 = 2400 lbs)).
- NEVER TOW A VEHICLE BEHIND A PASSENGER VEHICLE OR TRUCK UNLESS IT IS ON AN APPROVED TRAILER.

WARNING CONTINUED:

- THE VEHICLE SHOULD BE SECURELY TIED DOWN TO THE TRAILER, WITH THE SHIFT LEVER IN "NEUTRAL", KEY SWITCH "OFF", AND THE PARK BRAKE FIRMLY DEPRESSED AND LOCKED.
- WHEN TOWING A TRAILER, NORMAL SPEED SHOULD BE REDUCED AND CARE SHOULD BE USED WHEN TURNING A CORNER DUE TO THE ADDED LENGTH OF THE TRAILER.
- REMOVE THE VEHICLE'S WINDSHIELD BEFORE TRANSPORTING IT ON A TRAILER.

Storage - Gasoline Vehicle:

To prepare your vehicle for extended off season storage:

1. Store vehicle in a cool place. This will prevent self discharge of the battery. If the battery appears to be weak, have it charged using an automotive type 12 volt battery charger rated 10 amps or less.

⚠ DANGER

- GASOLINE - FLAMMABLE - EXPLOSIVE - DO NOT SMOKE. Keep sparks and flames away from the area of the vehicle.
- NEVER ATTEMPT TO DRAIN GASOLINE WHEN THE ENGINE IS HOT OR WHILE IT IS RUNNING. Be sure to clean up any spilled gasoline before operating the vehicle.
- STORE GASOLINE IN AN APPROVED GASOLINE CONTAINER ONLY. Store in a well-ventilated area away from sparks, open flames, heaters, or heat sources.
- DO NOT SERVICE, REPAIR, OR OPERATE IN AN ENCLOSED AREA WITHOUT PROPER VENTILATION. Engine produces carbon monoxide which is an odorless, deadly poison.
- KEEP GASOLINE OUT OF THE REACH OF CHILDREN.
- DO NOT SIPHON GASOLINE FROM THE VEHICLE.

⚠ WARNING

- DO NOT ATTEMPT TO CHARGE A BATTERY IF IT IS FROZEN OR IF THE CASE IS BULGED. Discard battery. Frozen batteries can explode.

⚠ CAUTION

- BATTERIES IN A LOW STATE OF CHARGE WILL FREEZE AT LOW TEMPERATURES.

2. Drain carburetor and seal the fuel tank.
   - 2.1. Close fuel shut-off valve, and then disconnect fuel line from the *inlet* side of the fuel pump.
   - 2.2. Place the Foward and Reverse Lever in the "NEUTRAL" position and the neutral lock-out cam in the "SERVICE" position. Run the engine until fuel remaining in the carburetor and fuel lines is used up and the engine stalls. Return the neutral lock-out cam to "OPERATE" position.
   - 2.3. Loosen (do not remove) the carburetor drain screw and drain fuel remaining in bowl into a small container, then pour the fuel from the container into vehicle fuel tank.
   - 2.4. Reconnect fuel line to fuel pump.
   - 2.5. Disconnect fuel vent line from fuel tank vent nipple.
   - 2.6. Plug the fuel tank vent nipple so that it is air tight. We recommend using a slip-on vinyl cap.
3. To protect the engine, remove the spark plug and pour 1/2 ounce of SAE 10 weight oil into the engine through the spark plug hole. Rotate the engine's crank shaft several times and then re-install the spark plug.

⚠ WARNING

- TURN KEY SWITCH "OFF", REMOVE KEY, AND LEAVE THE FORWARD/REVERSE LEVER IN "NEUTRAL" POSITION DURING STORAGE. This is to prevent unintentional starting of the vehicle.

4. Increase tire pressure to 20 psi.
5. Grease front suspension and do all quarterly periodic lubrication. (See Periodic Lubrication Schedule, under Periodic Service Schedule, Page 32.)
6. Thoroughly clean front body, rear body, seats, engine compartment, and underside of vehicle.
7. Do not latch the park brake. Block tires to prevent the vehicle from rolling.

To Return the Stored Vehicle to Service:

1. Restore fuel system to operation.
   1.1. Remove plug from the fuel tank vent nipple, reconnect fuel vent line to tank, and open fuel shut-off valve.
   1.2. Place the Foward and Reverse Lever in the "NEUTRAL" position and the neutral lock-out cam in the "SERVICE" position. Crank the engine until fuel is pumped into the carburetor and fuel lines and the engine starts. Turn engine off and return neutral lock-out cam to "OPERATE" position.
2. Readjust tire pressure to 12-14 psi.
3. Perform the Pre-Operation Checklist (See pages 9-10).

NOTE

- When running the engine for the first time after storage, it may smoke excessively due to the oil added to the engine.

Storage - Electric Vehicle:

⚠ WARNING

- TURN KEY SWITCH "OFF", REMOVE KEY, AND LEAVE THE FORWARD/REVERSE LEVER IN "NEUTRAL" POSITION DURING STORAGE. This is to prevent unintentional starting of the vehicle.
- DO NOT ATTEMPT TO CHARGE FROZEN BATTERIES OR BATTERIES WITH BULGED CASES. Discard battery. Frozen batteries can explode.

⚠ CAUTION

- BATTERIES IN A LOW STATE OF CHARGE WILL FREEZE AT LOW TEMPERATURES.
- WHEN WASHING VEHICLE, DO NOT DIRECT WATER STREAM AT THE SPEED SWITCH.
- IF BATTERY WIRE TERMINALS ARE DAMAGED OR CORRODED, THEY SHOULD BE REPLACED OR CLEANED AS NECESSARY. Failure to do so may cause them to overheat during operation.

1. Fully charge batteries. (See Battery - Electric Vehicle, Page 41)
2. Wash off any corrosion around the terminals with a solution of baking soda and water, then rinse (NOTE: Do not allow this solution to enter the batteries). Let the terminals dry and coat them with CLUB CAR battery terminal spray, part # 1014305.
3. Store in a cool, dry place. This will prevent self discharge of the batteries.
4. Adjust tire pressure to 20 psi.
5. Grease front suspension and do all quarterly periodic lubrication (See Periodic Lubrication Schedule, under Periodic Service Schedule, Page 34).

6. Thoroughly clean front body, rear body, seats, battery compartment, and underside of vehicle.
7. Do not latch the park brake. Block tires to prevent the vehicle from rolling.
8. Keep batteries fully charged during storage. (See Battery - Electric Vehicle, Page 41)
   - Recharge 36 volt vehicles with Accu-Power battery chargers every 6-8 weeks as necessary.
   - Leave PowerDrive System 48 vehicles with PowerDrive chargers plugged in during storage. The PowerDrive storage charge feature will automatically charge the batteries as needed (See Battery - Electric Vehicle, Page 41).

NOTE

- A PowerDrive System 48 vehicle will not operate while plugged to a charger.

To Return the Stored Vehicle to Service:

1. Fully charge batteries (See Battery - Electric Vehicle, Page 41).
   - PowerDrive System 48 vehicles will not require charging if they remained plugged in during storage.
2. Readjust tire to 18-20 psi.
3. Perform the Pre-Operation Checklist (See pages 9-10).

Maintenance:

GENERAL INFORMATION:

To ensure trouble-free vehicle performance, it is very important to follow an established preventive maintenance program (regularly scheduled services, even though the vehicle is functional). Regular and consistent vehicle maintenance can prevent the vehicle down-time and expensive repairs that result from neglect. Any vehicle not functioning correctly should be

be removed from use until it is properly repaired. This will prevent futher damage to the vehicle, and avoid the possibility of injury due to unsafe conditions.

Contact your local CLUB CAR distributor/dealer to perform all repairs and semi-annual and annual periodic service.

⚠ WARNING

- ONLY TRAINED TECHNICIANS SHOULD REPAIR OR SERVICE THE VEHICLE. Anyone doing even simple repairs or service should follow the correct procedures and obey the warnings listed in this manual, as well as those in the maintenance and service manual.
- ALWAYS WEAR SAFETY GLASSES OR EYE PROTECTION WHEN SERVICING THE VEHICLE.
- DO NOT WEAR LOOSE CLOTHING OR JEWELRY (RINGS, WATCHES, CHAINS, ETC.) WHILE SERVICING THE VEHICLE.
- ALWAYS USE INSULATED TOOLS WHEN WORKING AROUND BATTERIES OR ELECTRICAL CONNECTIONS.
- TURN KEY SWITCH TO "OFF", REMOVE THE KEY, PLACE FORWARD/REVERSE LEVER IN "NEUTRAL" POSITION, AND BLOCK TIRES PRIOR TO SERVICING.
- MOVING PARTS - DO NOT ATTEMPT TO SERVICE GASOLINE VEHICLE WHILE THE ENGINE IS RUNNING .
- HOT - DO NOT ATTEMPT TO SERVICE HOT ENGINE, MOTOR, RESISTORS, OR EXHAUST SYSTEM. Attempting to do so could cause severe burns.
- REMOVE THE SPARK PLUG WIRE AND DISCONNECT THE BATTERY TO AVOID UNINTENTIONAL STARTING OF THE ENGINE WHEN SERVICING THE GASOLINE VEHICLE.
- DISCONNECT THE BATTERIES BEFORE SERVICING THE ELECTRIC VEHICLE (See Figures 13 and 14).

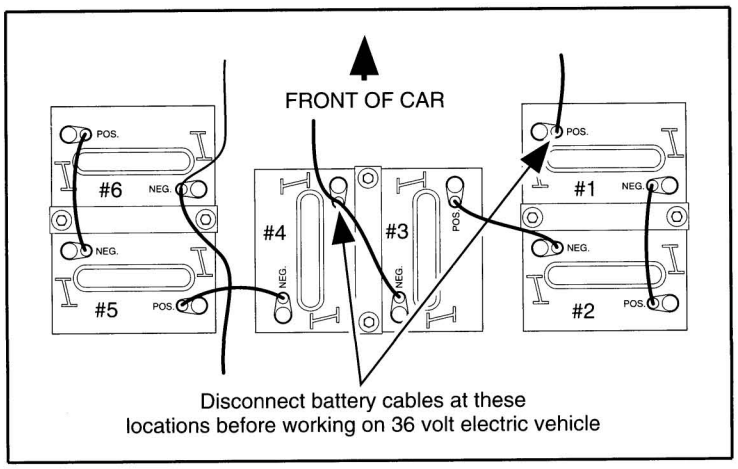

Figure 13

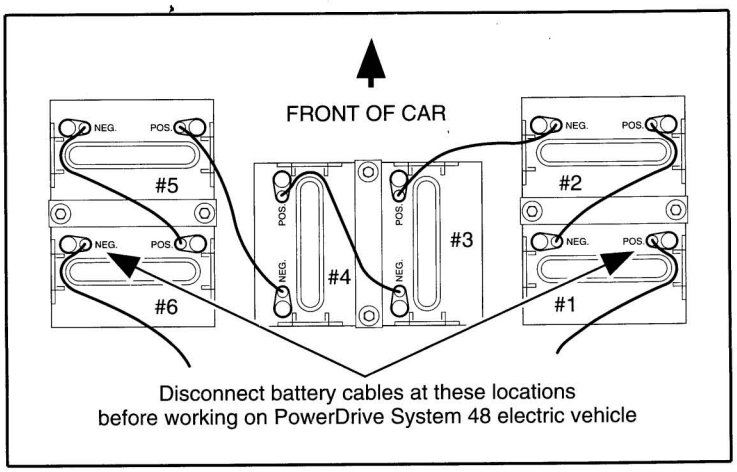

Figure 14

Periodic Service Schedule

Regular Interval	Service	Gas	Elec
Daily Service by owner	Check steering and linkages	•	•
	Check brake operation	•	•
	Check to be sure all warning labels are in place (Pages 4-7)	•	•
	Check tires for wear and damage	•	•
	Check engine for proper operation	•	
	Check accelerator/governor linkage for free movement and return	•	•
	Check reverse warning buzzer for proper operation	•	•
	Check engine air intake screen to be sure it is not clogged	•	
	Check to be sure park brake latches and releases properly	•	•
	Check charger plug and receptacle for damage and snug fit		•
	Charge batteries after each use		•
	Check fuel tank, lines, cap, pump, and carburetor for fuel leakage	•	
Weekly Service By Owner	Check speed of vehicle	•	•
	Clean battery terminals and wash dirt off battery case(s)	•	•
	Wash engine/battery compartment and underside of vehicle	•	•
	Check all electrical wires and ground wires for tightness or damage	•	•
	Inspect vehicle for loose hardware and tighten as required	•	•
	Check battery electrolyte level		•
	Check all daily items listed above	•	•
Monthly Service By Owner	Check exhaust system for leaks	•	
	Check brake pedal for play	•	•
	Check tire pressure and adjust (Capacities, page 36)	•	•
	Check brake cables for damage and replace as required	•	•
	Check all daily and weekly items listed above	•	•
Quarterly Service By Owner or Trained Personnel	Lubricate as shown in lubrication chart on Page 32 or 34	•	•
	Check air intake hose for leaks	•	
	Check engine oil level	•	
	Check resistor assembly for broken coils or loose connections (36volt Vehicle Only)		•
	Check all daily, weekly, and monthly items listed above	•	•

Regular Interval	Service	Gas	Elec
Semi-Annual Service by Trained Personnel Only (Every 100 Rounds or every 50 hours of operation)	Check, clean and adjust brakes	•	•
	Check front wheel alignment and camber; adjust as necessary	•	•
	Test batteries		•
	Check battery electrolyte level	•	•
	Check spark plug wire and boot for damage and proper routing	•	
	Check head and exhaust header/pipe flange connection gasket for leaks	•	
	Check starter/generator belt tension and adjust as necessary	•	
	Check condition of muffler	•	
	Inspect drive belt, replace as required	•	
	Lubricate as shown on chart on Page 32 or 34		•
	Check all wire insulation for cracks and worn insulation		•
	Check all daily, weekly, monthly, and quarterly items listed above	•	•
Annual Service by Trained Personnel Only (Every 200 Rounds or Every 100 Hours of Operation	Check air filter (every 6 months or 50 hours in dusty environment)	•	
	Inspect starter/generator brush length (blast with pressurized air to remove carbon)	•	
	Inspect spark plugs; clean and regap	•	
	Lubricate as shown on chart on Page 32 or 34	•	•
	Check motor brushes and commutator		•
	Check accelerator switch adjustment		•
	Check all scheduled items listed above	•	•
	Replace fuel filters	•	
	Change air filter	•	
First Change 100 Hours - Additional Change - Every 400 Rounds or Every 200 Hours or Operation, or Annually - Whichever Comes First	Change engine oil and oil filter	•	

WARNING:

- IF ANY PROBLEMS ARE FOUND, DO NOT OPERATE VEHICLE UNTIL REPAIRS ARE MADE. Failure to make necessary repairs could result in fire, severe personal injury, property damage, or death.

Periodic Lubrication Schedule - Gasoline Vehicles

Regular Interval	Service	Recommended Lubricant
Quarterly by Owner or Trained Personnel Only	1. Brake shaft bearings	Dry Moly Lube - Club Car P/N 1012151
	2. Brake linkage and pivots	Dry Moly Lube - Club Car P/N 1012151
	3. Accelerator push rod pivots and shifter cable pivots	Dry Moly Lube - Club Car P/N 1012151
	4. Front suspension (5 fittings)	Chassis Lube
Annually by Trained Personnel Only	5. Check/fill drive unit to plug level	.67 liters (22 0z.) SAE 30 WT. API Class SE, SF, or SG Oil or higher
	6. Inspect front wheel bearings (Repack as necessary)	Chassis Lube
	7. Check/fill transmission to plug level	80-90 WT. API Class GL-3 or 80-90 WT. AGMA Class EP Gear Lube
First Change 100 Hours - Additional Change - Every 400 Rounds or Every 200 Hours or Operation, or Annually - Whichever Comes First	8. Change engine oil and oil filter	.97 liters (32 oz.) without filter; 1.16 liter (38 oz.) with filter. 10W30 above 32°F (0°C) or SAE 5W20 below 32°F (0°C) API Class SE, SF, SG Oil or higher

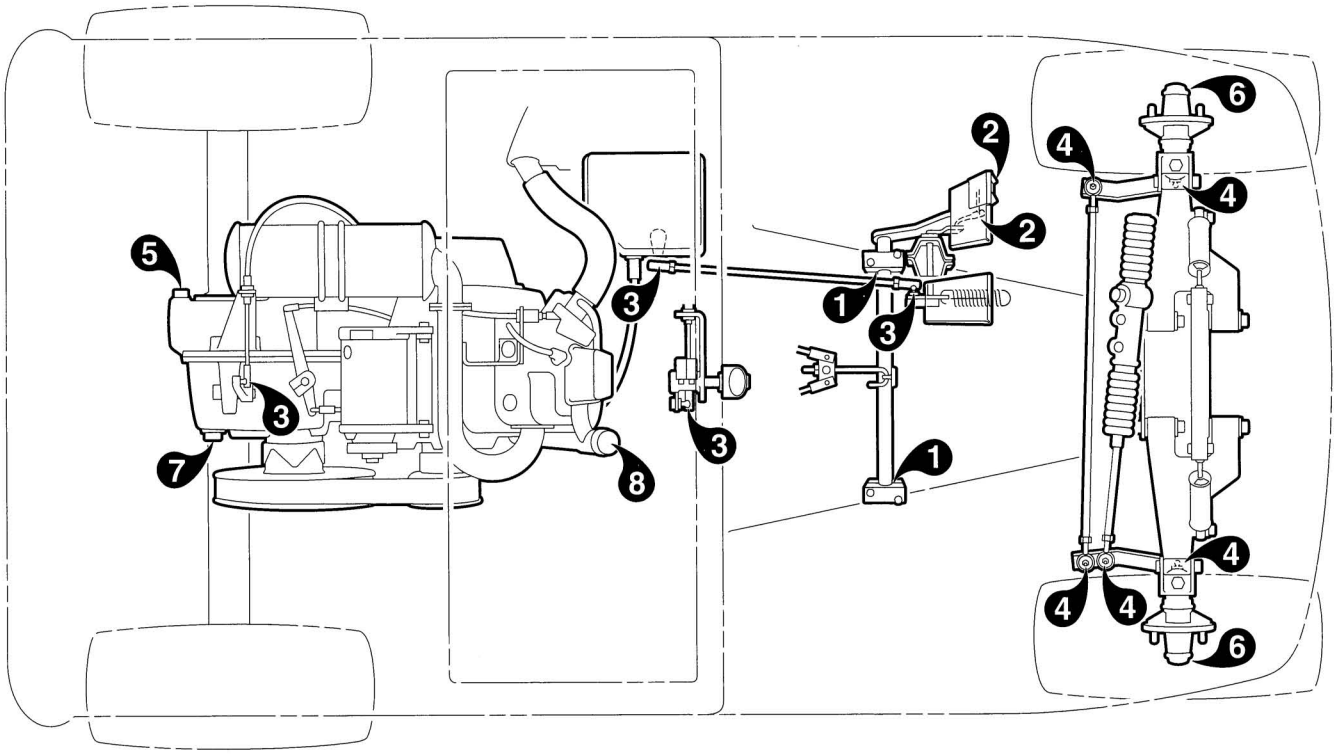

Figure 15

Periodic Lubrication Schedule - Electric Vehicles

Regular Interval	Service	Recommended Lubricant
Quarterly by Owner or Trained Personnel Only	1. Brake shaft bearings	Dry Moly Lube - Club Car P/N 1012151
	2. Brake linkage and pivots	Dry Moly Lube - Club Car P/N 1012151
	3. Accelerator push rod pivots and shifter cable pivots	Dry Moly Lube - Club Car P/N 1012151
	4. Front suspension (5 fittings)	Chassis Lube
Annually by Trained Personnel Only	5. Check/fill drive unit to plug level	.67 liters (22 0z.) SAE 30 WT. API Class SE, SF, or SG Oil or higher
	6. Inspect front wheel bearings (Repack as necessary)	Chassis Lube

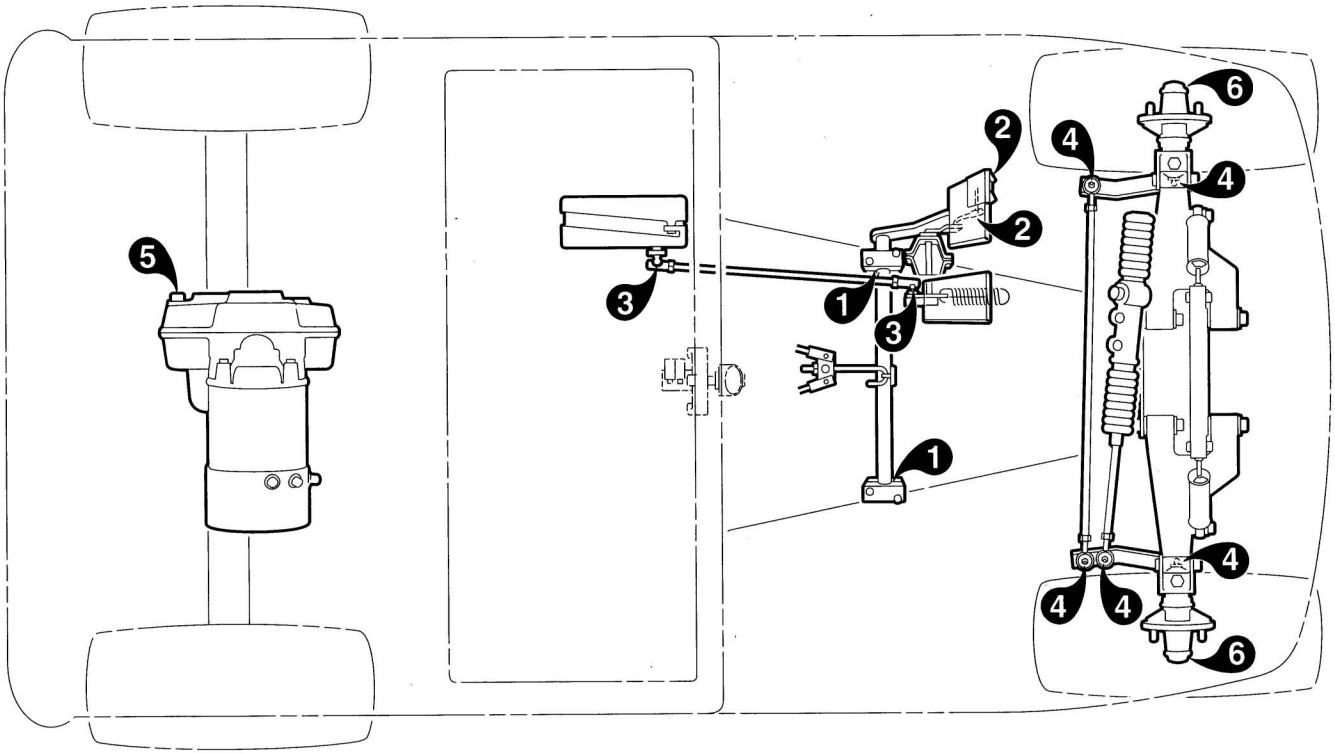

Figure 16

Capacities:

	GASOLINE	ELECTRIC
Engine Crankcase without Filter	.98 liters (32 oz.)	
Engine Crankcase with Filter	1.16 liters (38 0z.)	
Transmission	.61 liters (20 oz.)	
Drive Unit	.67 liters (22 oz.)	.67 liters (22 oz.)
Gasoline Tank	26.5 liters (7 U.S. gallons)	
Tire Pressure	12-14 psi.	18-20 psi

Engine Oil - Gasoline Vehicle:

Even though the low oil warning light on the dash should warn you if your oil is getting low, engine oil level should be checked monthly (See Figure 17).

NOTE

- ENGINE MUST BE IN LEVEL POSITION. Remove oil level dipstick from the oil filler tube and wipe oil from it with a clean cloth or paper towel. Check oil by inserting the dipstick fully into oil filler tube and immediately removing it again. If oil level is at or below "Add" mark on gauge, add oil until level is between "Add" and "Full" (safe level). Reinsert dipstick into oil filler tube.

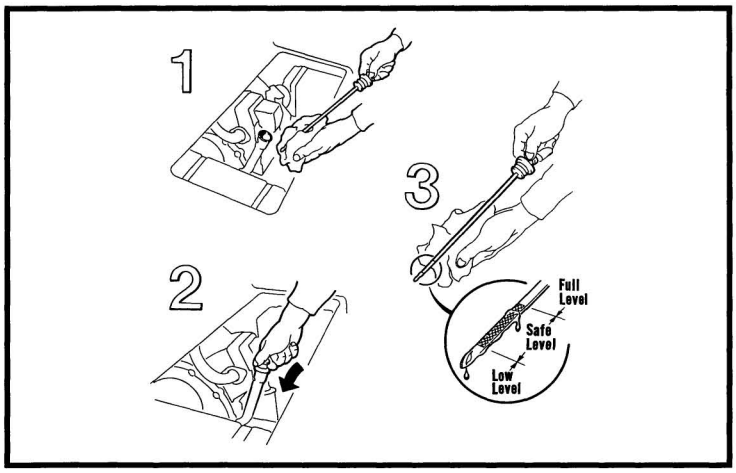

Figure 17

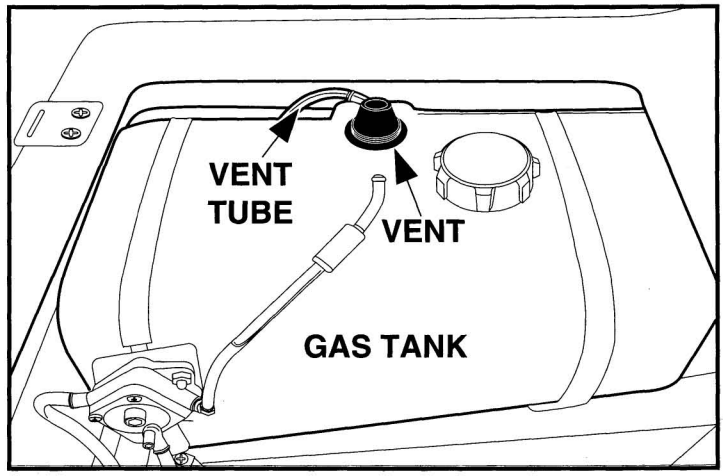

Figure 18

Fueling Instructions - Gasoline Vehicle:

⚠ DANGER

- GASOLINE - FLAMMABLE - EXPLOSIVE - DO NOT SMOKE. Keep sparks and flames away from the area of the vehicle.
- SERVICE OR REPAIR IN A WELL VENTILATED AREA ONLY.
- NEVER POUR GASOLINE INTO GAS TANK WHILE THE ENGINE IS HOT OR RUNNING.
- TO AVOID ELECTRIC ARC CAUSED BY STATIC ELECTRICITY, THE FUEL STORAGE/PUMPING DEVICE MUST BE GROUNDED. If the pump is not grounded, the vehicle must be grounded to the pump before and during the fueling operation.
- IF THE VEHICLE HAS AN ALL WEATHER ENCLOSURE INSTALLED, THE GAS TANK MUST BE PROPERLY VENTED AS SHOWN IN FIGURE 18, PAGE 37.
- TO AVOID THE POSSIBILITY OF FIRE, CLEAN UP ANY SPILLED GASOLINE BEFORE OPERATING VEHICLE .

1. Lift and remove seat bottom.
2. The fuel tank is located on passenger side of vehicle. Remove fuel cap and fill the fuel tank with fresh unleaded gasoline only.

NOTE

- Gasoline quality and chemical additives can affect vehicle performance. We do not recommend gasolines that are blended with alcohol. Avoid using these fuels whenever possible. Vehicles that will be stored for extended periods should be prepared for storage as outlined in this owner's manual.

3. Replace fuel cap on tank, being sure cap is tightened securely.
4. Replace seat bottom.

Battery - Gasoline Vehicle:

⚠ DANGER

- BATTERY - EXPLOSIVE GASES - DO NOT SMOKE. Keep sparks and flames away from the area of the vehicle. Tools, wires, and metal objects can cause sparks when "shorted" across a battery. Follow all instructions carefully when dealing with batteries.
- VENTILATE WHEN CHARGING IN AN ENCLOSED SPACE.
- POISON - CONTAINS ACID - CAUSES SEVERE BURNS - AVOID CONTACT WITH SKIN, EYES, OR CLOTHING. ANTIDOTES:
  - EXTERNAL - FLUSH WITH WATER FOR 15 MINUTES. Call physician immediately.
  - INTERNAL - DRINK LARGE QUANTITIES OF MILK OR WATER, FOLLOW WITH MILK OF MAGNESIA OR VEGETABLE OIL. Call physician immediately.
  - EYES - FLUSH WITH WATER FOR 15 MINUTES. Call physician immediately.

⚠ WARNING

- DO NOT JUMP START VEHICLE. To charge battery use an automotive type 12 volt charger rated at 10 amps or less.
- ALWAYS WEAR SAFETY GLASSES OR EYE PROTECTION WHEN SERVICING THE VEHICLE.
- ALWAYS USE INSULATED TOOLS WHEN WORKING AROUND BATTERIES OR ELECTRICAL CONNECTIONS.

The battery in the DS Gasoline Vehicle is a 12 volt, low maintenance battery that requires infrequent watering (Figure 19).

Any corrosion around the positive (+) or negative (-) terminals should be washed off with a solution of baking soda and water. Rinse solution off the battery. Be sure terminals are tight. Let the terminals dry and then spray them with CLUB CAR battery terminal spray (Club Car part no.1014305).

⚠ CAUTION

- IF BATTERY WIRE TERMINALS ARE DAMAGED OR CORRODED, THEY SHOULD BE REPLACED OR CLEANED AS NECESSARY. Failure to do so may cause them to overheat during operation.

Be sure battery hold-down bracket is properly tightened. Torque to 1.71/2.86 N-m (15-25 in. lbs.). A loose hold-down bracket may allow the battery to become damaged from vibration or jarring. A hold-down bracket that is too tight may buckle or crack the battery case.

If battery appears weak, have it charged by a trained mechanic. The battery should never be left discharged any longer than absolutely necessary (do not leave discharged overnight).

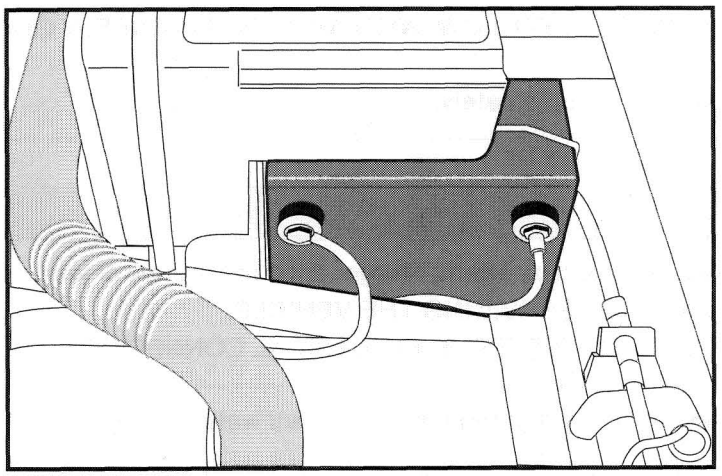

Figure 19

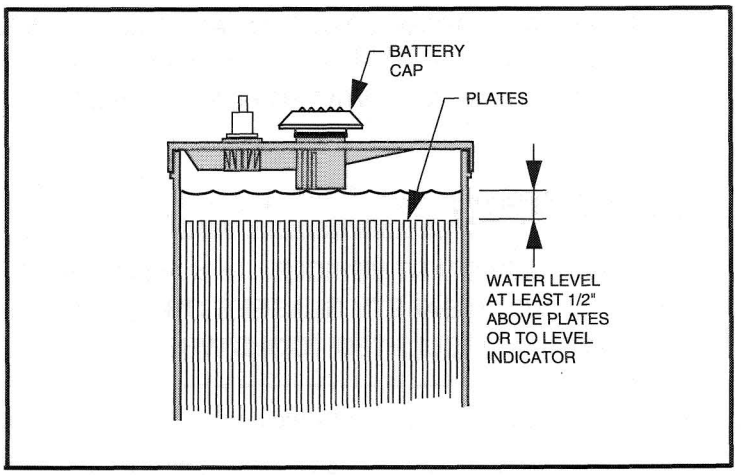

Figure 20

Battery - Electric Vehicle:

⚠ DANGER

- BATTERY - EXPLOSIVE GASES - DO NOT SMOKE. Keep sparks and flames away from the area of the vehicle. Tools, wires, and metal objects can cause sparks when "shorted" across a battery. Follow all instructions carefully when dealing with batteries.
- VENTILATE WHEN CHARGING IN AN ENCLOSED SPACE.
- POISON - CONTAINS ACID - CAUSES SEVERE BURNS - AVOID CONTACT WITH SKIN, EYES, OR CLOTHING. ANTIDOTES:
  - EXTERNAL - FLUSH WITH WATER FOR 15 MINUTES. Call physician immediately.
  - INTERNAL - DRINK LARGE QUANTITIES OF MILK OR WATER, FOLLOW WITH MILK OF MAGNESIA OR VEGETABLE OIL. Call physician immediately.
  - EYES - FLUSH WITH WATER FOR 15 MINUTES. Call physician immediately.

⚠ WARNING

- ALWAYS WEAR SAFETY GLASSES OR EYE PROTECTION WHEN SERVICING THE VEHICLE.
- ALWAYS USE INSULATED TOOLS WHEN WORKING AROUND BATTERIES OR ELECTRICAL CONNECTIONS.

⚠ CAUTION

- TURN OFF ALL ACCESSORIES on **PowerDrive System 48** vehicles before charging batteries.

The batteries in the 36 Volt DS Electric Vehicle are 6 volts each.

The batteries in the PowerDrive System 48 Electric Vehicle are 8 volts each.

Both the 6 and 8 volt batteries are deep cycle batteries, specially built for electric vehicle application. Automotive batteries should never be used. New batteries will not deliver their full capabilities until they have been discharged and recharged 20 to 50 times. To obtain the maximum service life from new batteries, restrict vehicle with new batteries to 36 holes of use between charges in the first two months of operation. Batteries should be fully charged before first use of new vehicle, and before releasing vehicle for use each day.

Battery Care:

To keep batteries in good working condition, follow this maintenance program on a regular basis:

1. The batteries should be clean and free of corrosion. Wash tops and terminals of batteries with a solution of baking soda and water. Rinse solution off batteries (NOTE: Do not allow this solution to enter the battery). Be sure terminals are tight. Let the terminals dry and then spray them with CLUB CAR battery protector spray (P/N1014305).
2. The water level in the batteries should be checked weekly (See Figure 20, page 40, for proper level). Add water only after charging unless the water level is below the top of the plates. In this case, add just enough water to cover the plates, charge and then check the level again. Never charge batteries if plates are exposed above water level. For best battery life, add only distilled water.
3. The hold-down straps should be tight enough so that the batteries do not move while the vehicle is in motion, but not so tight as to crack or buckle the battery case. Torque hold-down retaining nuts to 1.7/2.9 N-m (15-25 in.lbs.). The terminal connections should be clean and tight, and any worn insulation or frayed wires should be replaced. Torque battery terminals to 10.2/11.3 N-m (90-100 in.lbs.).

⚠ CAUTION

- IF BATTERY WIRE TERMINALS ARE DAMAGED OR CORRODED, THEY SHOULD BE REPLACED OR CLEANED AS NECESSARY. Failure to do so may cause them to overheat during operation.

4. After use, the batteries should be placed on charge. The batteries should never be left discharged any longer than absolutely necessary (do not leave discharged overnight).

Battery Charger - Electric Vehicle:

⚠ DANGER

- BATTERIES EMIT HYDROGEN WHILE BEING CHARGED. HYDROGEN IS AN EXPLOSIVE GAS. If the vehicle is equipped with a weatherproof enclosure, it should be unzipped and pulled back while batteries are being charged. This is to avoid accumulation of hydrogen gas inside enclosure.
- CHARGING AREAS MUST BE VENTILATED. The total volume of air in the building must to be changed five (5) times per hour. Exhaust fans should be located at the highest point of the roof. Contact a local HVAC engineer.

⚠ WARNING

- EACH CHARGER SHOULD HAVE ITS OWN DEDICATED 20 AMPERE (15 AMPERE IN CANADA) (MAXIMUM) BRANCH CIRCUIT PROTECTION (CIRCUIT BREAKER OR FUSE), IN ACCORDANCE WITH THE NATIONAL ELECTRICAL CODE, ANSI/NFPA 70, AND LOCAL CODES AND ORDINANCES.
- DO NOT USE AN ADAPTOR TO PLUG THE CHARGER WITH A THREE-PRONG PLUG INTO A TWO-PRONG OUTLET. Improper connection of the equipment-grounding conductor can result in a fire or an electrical shock.
- AN EXTENSION CORD OR ELECTRICAL OUTLET MUST ACCEPT A THREE-PRONG PLUG. The use of an improper extension cord could result in a fire or an electrical shock.
- ONLY TRAINED TECHNICIANS SHOULD REPAIR OR SERVICE THE CHARGER. Contact your nearest CLUB CAR distributor/dealer.
- DO NOT OPERATE THE CHARGER IF IT HAS RECEIVED A SHARP BLOW, WAS DROPPED, OR OTHERWISE DAMAGED IN ANY WAY.

⚠ WARNING

- HAVE WORN, CUT, OR DAMAGED POWER CORDS OR WIRES REPLACED IMMEDIATELY.
- DO NOT USE NEAR FUELS, GRAIN DUST, SOLVENTS, THINNERS, OR OTHER FLAMMABLES. Chargers can ignite flammable materials and vapors.
- DO NOT EXPOSE TO RAIN OR ANY LIQUID. Keep the charger dry.
- NEVER PUSH OBJECTS OF ANY KIND INTO THE CHARGER THROUGH CABINET SLOTS. They may touch dangerous voltage points or cause an electrical short that could result in fire or electrical shock.
- **36 VOLT ACCU-POWER CHARGER**: DO NOT DISCONNECT THE DC OUTPUT PLUG FROM THE BATTERY RECEPTACLE WHEN THE CHARGER IS ON. The resulting arcing and burning could damage the plug and receptacle and could cause batteries to explode. If the charger must be stopped, disconnect the AC supply plug from the wall outlet before disconnecting the charger DC output plug.
- **48 VOLT POWERDRIVE CHARGER**: WHEN THE CHARGER IS ON, DISCONNECT THE DC OUTPUT PLUG FROM THE BATTERY RECEPTACLE ***SLOWLY***. Jerking or pulling the plug out quickly could cause arcing and burning that could damage the plug and receptacle and could cause batteries to explode.

⚠ CAUTION

- DO NOT BLOCK OR COVER SLOTS AND OPENINGS IN THE BACK AND BOTTOM OF CABINET. They provide ventilation and protect the charger from overheating.
- DO NOT ALLOW CLOTHING, BLANKETS, OR OTHER MATERIAL TO COVER THE CHARGER.
- PROVIDE ADEQUATE VENTILATION FOR THE CHARGER .
- **36 VOLT ACCU-POWER CHARGER**: DO NOT LEAVE DC PLUG PLUGGED IN WHILE UNATTENDED FOR MORE THAN TWO (2) DAYS IN A ROW. Severe overheating and damage to the batteries may result if the charger does not turn off.

CAUTION CONTINUED:

- INSTALL SURGE ARRESTORS ON INCOMING AC POWER LINES. Surge arrestors will help protect electrical/electronic components in the charger and on the vehicle from all but direct or very close lightning strikes.

NOTE

- Because the **PowerDrive Charger** has a storage charge feature that automatically recharges the batteries every 15 days, it can remain plugged to a PowerDrive vehicle throughout the storage period.
- Shortly after charging has begun, the **PowerDrive Charger** will shut off in order to run a self-diagnostic program (ammeter will drop to 0). Charging will resume in a few moments (ammeter will return to current state of charge).

Each electric vehicle is supplied with a fully automatic battery charger as standard equipment. The AC cord to each charger is to be connected to a source capable of supplying 10 amperes minimum per charger.

The battery charger must be grounded to reduce the risk of electrical shock. The charger is equipped with an AC electric cord having an equipment-grounding conductor and a grounding type plug and is for use on a nominal 115 Volt 60 Hertz circuit, unless otherwise noted on the charger. The plug must be grounded to an appropriate dedicated receptacle that is properly installed and grounded in accordance with the National Electrical Code, ANSI/NFPA 70, and all local codes and ordinances.

The use of an extension cord with the charger should be avoided. If an extension cord must be used, use a three conductor No. 12 AWG heavy duty cord with a ground conductor in good electrical condition. Keep it as short as possible (no more than twelve (12) feet). Locate all cords so that they will not be stepped on, tripped over, or otherwise subject to damage or stress.

Ventilation fans should be located at the highest point in the room, and must be capable of changing the total volume of air in the room five (5) times per hour. Consult a local HVAC engineer.

To charge batteries:

Insert the charger's DC plug into the vehicle's receptacle. The charger will turn on two to ten seconds later. (Figure 21)

- When inserting the **PowerDrive** DC plug, align the raised guide on the plug with the guide slot in the receptacle and push straight in *slowly*.
- The **PowerDrive Charger** interacts with an on-board computer on the PowerDrive System 48 Golf Car. The computer records the amount of energy consumed during vehicle use. While the charger is plugged in, the golf car's control circuit is locked out, preventing operation of the vehicle, as well as the possibility of consequent damage to the charger and the vehicle.

  Once the lock-out is actuated, the charger turns on. The on-board computer then records the amount of energy being returned to the batteries. When the optimum amount of energy needed to replenish the batteries is returned, the charger will shut off. The control circuit lock-out remains activated until the charger plug is disconnected from the vehicle.

  Because of these unique features, **only PowerDrive System 48 vehicles are compatible with the PowerDrive Charger** (Neither vehicles made by other manufacturers, nor other Club Car models are compatible).

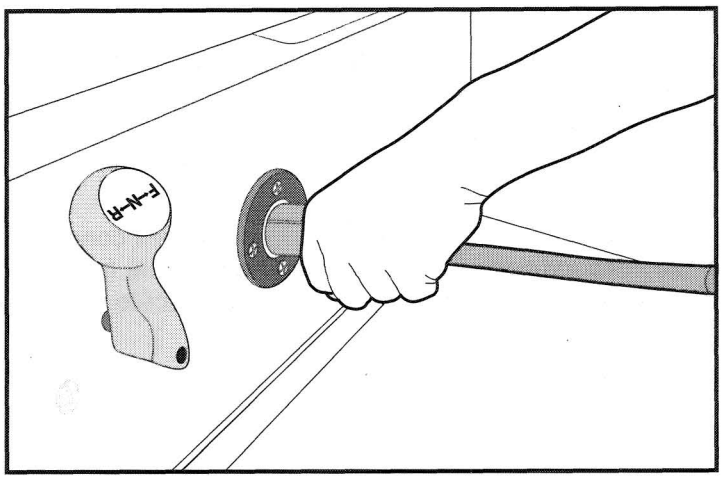

Figure 21

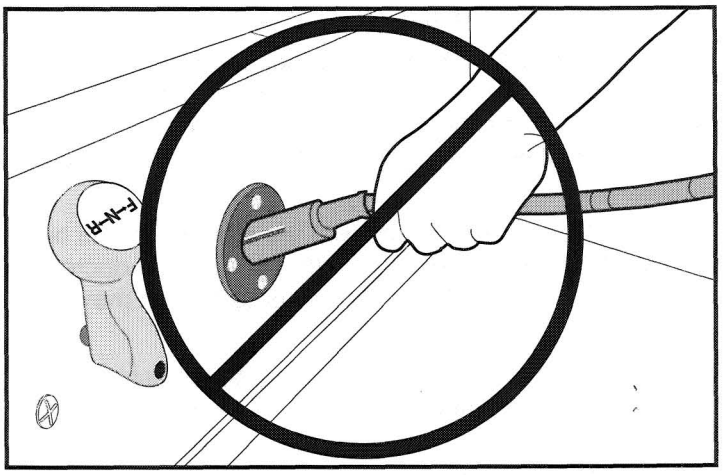

Figure 22

As long as the charger is allowed to shut off by itself, the batteries will be fully charged. Overcharging and undercharging should be prevented.

Batteries should be put on charge even if they have been used for only a short period (9 holes of golf or 10 minutes). The charger is automatic and will cut off when batteries are fully charged. If the charger does not seem to be operating properly, or if the batteries seem weak, contact your local CLUB CAR distributor/dealer.

NOTE: When temperatures fall below 18.3 C (65° F), batteries charged in unheated areas should be placed on charge as soon after use as possible. Batteries are warmest immediately after use, and cold batteries require more time to fully charge.

Plug and Receptacle:

⚠ WARNING

- BE SURE ALL WIRE CONNECTIONS AT THE RECEPTACLE AND THE FUSE LINK ARE CLEAN AND TIGHT.
- DO NOT ROCK OR BEND THE PLUG. To connect the charger plug to the vehicle receptacle, grasp the plug handle and push the plug straight into the receptacle. (See Figure 21, Page 46)
- DO NOT PULL ON THE CORD. (See Figure 22, Page 46) DO NOT TWIST, ROCK OR BEND THE PLUG. To disconnect the charger plug from the vehicle receptacle, grasp the plug by the handle and pull the plug straight out of the receptacle.
- DO NOT CONNECT A PORTABLE CHARGER TO THE RECEPTACLE IF THE CHARGER CORD, PLUG, OR THE VEHICLE RECEPTACLE IS BROKEN, DAMAGED IN ANY MANNER, OR DOES NOT MAKE A GOOD ELECTRICAL CONNECTION. Fire or personal injury can result. Have it replaced by a qualified service person immediately.
- FAILURE TO FOLLOW THESE INSTRUCTIONS COULD RESULT IN DAMAGE TO THE CHARGER CORD, THE PLUG, AND (OR) THE VEHICLE'S RECEPTACLE.

DO NOT USE A CHARGER IF:

- THE PLUG IS TOO LOOSE OR DOES NOT MAKE A GOOD CONNECTION.
- THE PLUG AND RECEPTACLE FEEL HOTTER THAN NORMAL DURING CHARGE.

⚠ WARNING

DO NOT USE A CHARGER IF:

- THE PLUG PINS (PowerDrive System 48) OR BLADES (36 Volt Accu-Power), OR RECEPTACLE CONTACTS ARE BENT OR CORRODED.
- THE PLUG, RECEPTACLE, OR CORDS ARE CUT, WORN, HAVE ANY EXPOSED WIRES OR ARE DAMAGED IN ANY WAY.

Using the charger with any of the above symptoms could result in a fire, property damage, personal injury, or death.

The DC charger cord and plug are wear items and must be replaced when worn or damaged.

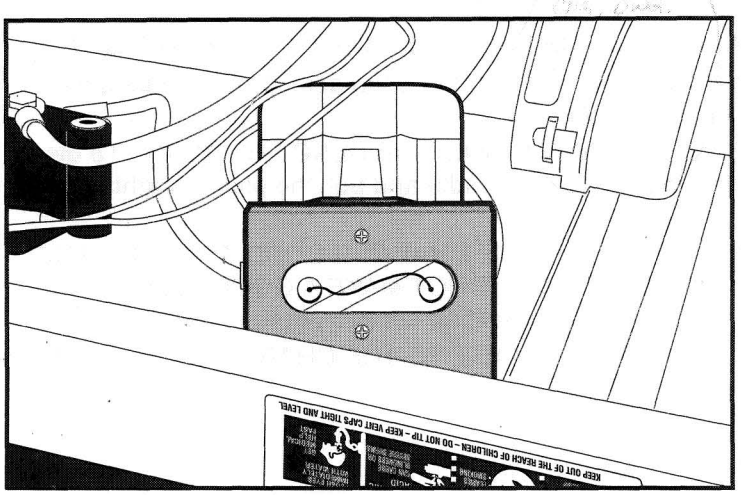

Figure 23

If the charger plug becomes difficult to insert or disconnect, the receptacle contacts should be lightly sprayed with WD-40 brand spray lubricant. The plug should then be inserted and removed several times to ensure ease of insertion, ease of removal, and good electrical contact.

NOTE

- If warning tag has been damaged or removed from the DC cord, have it replaced immediately.

Fuse Link:

As an additional feature to protect the batteries and charging circuit from an overload, the electric vehicle is equipped with a fuse link (See Figure 23). If the portable charger does not come on when the vehicle is placed on charge, visually inspect the fuse link.

Cleaning:

⚠ WARNING

- IF THE FUSE LINK IS BLOWN, DETERMINE THE SOURCE OF THE ELECTRICAL PROBLEM AND CORRECT IT BEFORE REPLACING THE FUSE. Contact your nearest CLUB CAR Distributor/Dealer

The vehicle is equipped with an Armorflex® front body and rear body. Use only mild dishwashing liquid soap with a sponge or soft cloth for normal cleaning.

Minor scratches or blemishes in the front body or the rear body can be buffed out using most commercially available polishing compounds and polishes.

The seats of the vehicle will last longer with proper cleaning. Mild soap or detergent with a sponge or soft cloth for normal cleaning is recommended. For stubborn or imbedded dirt, a soft bristle brush may be used.

Do not use harsh detergents or cleaning solvents on the front body, the rear body, or the seat.

Battery acid, fertilizers, tars, asphalt, creosote, paint, or chewing gum should be removed immediately to prevent possible stains. Use commercial automotive products because the finish on the vehicle is the same as the finish on today's automobiles.

Vehicle Controllers - Electric Vehicle:

The DS Electric vehicle is equipped with either a Solid State Speed Controller (PowerDrive System 48), or a V-Glide Speed Controller (36 Volt Vehicle).

In order to properly service and maintain the Solid State Controller Vehicle or the V-Glide Speed Controller Vehicle, it is necessary to understand the electrical circuitry and the functions of all components in both systems. Therefore, if any repair or servicing needs to be performed, we recommend that it be performed by an authorized CLUB CAR distributor/dealer using CLUB CAR OEM parts.

Accessories and Options:

The vehicle is available with a complete line of optional equipment items and accessories. These include a lighting kit, horn, taillight packages, all weather enclosures, etc.

Care should be taken that these accessories and options are properly installed by trained technicians, and that they are used in the manner for which they were designed.

OPTIONAL EQUIPMENT:

ALL VEHICLES

- Canopy Top
- Snap-on Tinted Windshield
- Weather-Proof Enclosure
- Adjustable Seat Back
- I.D. Numbers
- Glove Box
- Ashtray
- Lighting Package (High/Low Beam Headlights, Taillights, Brake Lights, and Horn)
- Deluxe Lighting Package with Turn Signals
- AM/FM Stereo Cassette Radio with Clock
- Hour Meter
- Sweater Basket
- Information Holder
- Rear View Mirror
- Custom Club Decals
- Custom Colors
- Accent Stripe
- Scuff Guards
- Woodgrain Decal
- Power Rib Tires
- Extra Traction Tires
- White Wall Tires
- Wheel Covers
- Extra Two-Bag Attachment
- Bagwell Liner
- Sand Bottle Divot Repair Kit
- Sand Bunker Rake Kit
- Sand Basket and Bucket Divot Repair Kit
- Trailer Hitch
- Temporary Tow Bar for single vehicle towing
- Permanent Tow Bar for multiple vehicle towing (factory installation)
- On-board Tow Bar

ELECTRIC VEHICLES

- State of Charge Indicator
- 3.75 hp Electric Motor
- On-Board Charger with Rewind Cord

GASOLINE VEHICLES

- Fuel Gauge

⚠ WARNING

TINTED WINDSHIELDS WILL NOT PROTECT OCCUPANTS FROM FLYING OBJECTS (GOLF BALLS, ETC.).

Subsequent Owner Registration:

In the event a vehicle is bought used from another individual or from a distributor/dealer, we strongly urge the new owner to re-register the vehicle with Club Car. This will enable us to contact you if the need arises. Please send your name, address, and serial number(s) of the vehicle(s) to CLUB CAR, INC., P.O. Box 204658, Augusta. GA 30917-4658, ATTN: Vehicle Registration.

FAIRWAY VILLAGER

The Fairway Villager is designed to provide a smooth and comfortable ride for four passengers, and is offered in both gasoline and PowerDrive System 48 electric power configurations. An optional rack for two golf bags is also available. Contact your nearest CLUB CAR distributor/dealer. This Owner's Manual should be read thoroughly prior to operating the vehicle.

The Fairway Villager should be driven and maintained as stated in this Owner's Manual with the following exceptions:

⚠ WARNING

- TO PREVENT POSSIBLE INJURY TO AN UNSUSPECTING PASSENGER, OR DAMAGE TO THE VEHICLE, AVOID SUDDEN STARTS, STOPS, AND ABRUPT TURNS.
- SLOWER SPEEDS SHOULD BE OBSERVED WHEN FOUR PASSENGERS ARE IN THE VEHICLE.
- PASSENGERS SHOULD HOLD ON TO SEAT HANDLES OR HAND RAILS AT ALL TIMES. (See Figure 24)
- DO NOT LEAVE CHILDREN UNATTENDED ON REAR SEAT WHILE VEHICLE IS MOVING.
- NO MORE THAN FOUR PASSENGERS SHOULD BE ON THE VEHICLE AT ONE TIME.
- KEEP ALL BODY PARTS INSIDE THE VEHICLE TO PREVENT THEM FROM GETTING CAUGHT BETWEEN THE VEHICLE AND THE GROUND OR OTHER OBJECTS.

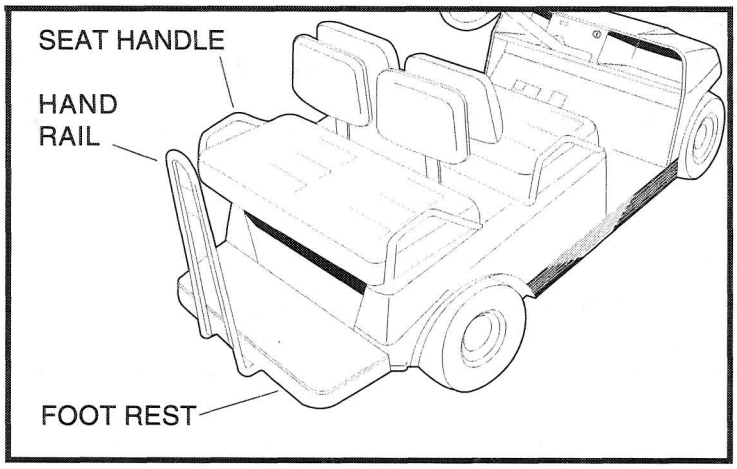

Figure 24

Maintenance:

Refer to Pages 30-35 for periodic service schedule and periodic lubrication schedule.

NOTE

- If the vehicle is constantly hauling heavy loads, the preventive maintenance procedures should be performed more often than recommended in the service schedules and lubrication schedule.

Storage Compartment:

There is an enclosed storage compartment underneath the rear seat with .06 cu.m. (2 cu.ft.) of storage area. Access the storage compartment by lifting the rear seat.

ELECTRIC FAIRWAY VILLAGER:

An optional on-board charger is available for the Fairway Villager electric; it should be plugged into a properly grounded nominal 115 Volts AC, 60 Hertz outlet. The AC line to which the charger is to be connected must be capable of supplying 10 amperes minimum to the charger. The rear seat should be propped open while charging the batteries.

⚠ WARNING

- EACH CHARGER SHOULD HAVE ITS OWN DEDICATED 20 AMPERE (15 AMPERE IN CANADA) MAXIMUM BRANCH CIRCUIT PROTECTION (CIRCUIT BREAKER OR FUSE), IN ACCORDANCE WITH THE NATIONAL ELECTRICAL CODE, ANSI/NFPA 70, AND LOCAL CODES AND ORDINANCES.

⚠ CAUTION

- TURN OFF ALL ACCESSORIES on **PowerDrive System 48** vehicles before charging batteries.

⚠ CAUTION

- IF USING AN ON-BOARD CHARGER, BE SURE THE AC PLUG IS UNPLUGGED FROM THE OUTLET BEFORE ATTEMPTING TO DRIVE THE VEHICLE. Charger and AC outlet will be damaged if charger is not unplugged before driving. Be sure the AC cord is properly wound up on the reel before driving the vehicle. Study all general information, notes, cautions, and warnings as well as all information, notes, cautions, and warnings specific to the PowerDrive Charger and PowerDrive System 48 in the Battery Charger section of this manual (Pages 43-48).

SPECIFICATIONS	DS GASOLINE	POWERDRIVE SYSTEM 48 ELECTRIC	DS 36 VOLT ELECTRIC	FAIRWAY VILLAGER GASOLINE	FAIRWAY VILLAGER ELECTRIC
POWER SOURCE					
Engine...4 cycle, OHV, 286cc, 9.0 hp rated, single cylinder, air cooled, pressure lubrication system	•			•	
Drive Motor...Direct Drive, 48 volts DC Series Wound, 3.1 hp.		•			•
Drive Motor...Direct Drive, 36 volts DC Series Wound, 2.97 hp.			•		
Fuel System...Side draft carburetor with float bowl, fixed jets, fuel filter, and impulse fuel pump	•			•	
Governor...Automatic ground speed sensing, internally geared in transmission	•			•	
Ignition...Transistor electronic ignition with electronic RPM limiter	•			•	
Transmission...Fully synchronized forward and reverse with neutral (.97:1 forward, 1.03:1 reverse)	•			•	
Drive Unit...Double reduction helical gear with 12.28:1 direct drive axle	•	•	•	•	•
Electrical System...48 volts DC, reduced speed reverse		•			•
Electrical System...36 volts DC, reduced speed reverse			•		
Electrical System...12 volts 325 cold cranking amp battery and 35 amp charging capacity	•			•	
Batteries...High capacity Trojan PowerDrive 8volt 110 min. capacity		•			•
Batteries...High capacity Trojan T-105 6volt 107 min. capacity			•		
Charger...Automatic 17 amp PowerDrive UL and CSA approved		•			•
Charger...Automatic 21 amp Accu-Power UL and CSA approved			•		
Torque Converter...Automatic, varible speed, dry type	•			•	
STEERING/SUSPENSION					
Steering...Self-adjusting rack and pinion	•	•	•	•	•
Suspension...Front and rear tapered mono-leaf springs with dual hydraulic shocks	•	•	•	•	•
Brakes...Dual rear wheel brakes with cast iron drums and single brake pedal with automatic-release park brake	•	•	•	•	•
BODY/CHASSIS					
Frame/Chassis...Twin I-Beam welded aluminum	•	•	•	•	•
Front and Rear Body...Armorflex®	•	•	•	•	•
Body Finish...Clear protective coat over molded-in color	•	•	•	•	•
Tires...18.00 x 8.50-8.00 tubeless, 4-ply rated	•	•	•	•	•
SEATING CAPACITY/FUEL CAPACITY					
Seating Capacity...2 persons	•	•	•		
Seating Capacity...4 persons				•	•
Fuel Tank...26.5 liters (7 gal. U.S.), unleaded gasoline only	•			•	

SPECIFICATIONS	DS GASOLINE	POWERDRIVE SYSTEM 48 ELECTRIC	DS 36 VOLT ELECTRIC	FAIRWAY VILLAGER GASOLINE	FAIRWAY VILLAGER ELECTRIC
DIMENSIONS					
Overall Length	232 cm (91-1/2")	232 cm (91-1/2")	232 cm (91-1/2")	254 cm (100")	254 cm (100")
Overall Width	120 cm (47-1/4")	120 cm (47-1/4")	120 cm (47-1/4")	120 cm (47-1/4")	120 cm (47-1/4")
Overall Height at Steering Wheel	122 cm (48")	122 cm (48")	122 cm (48")	122 cm (48")	122 cm (48")
Wheelbase	166 cm (65-1/2")	166 cm (65-1/2")	166 cm (65-1/2")	166 cm (65-1/2")	166 cm (65-1/2")
Ground Clearance	11 cm (4-1/2")	11 cm (4-1/2")	11 cm (4-1/2")	11 cm (4-1/2")	11 cm (4-1/2")
Front Wheel Tread	88 cm (34-1/2")	88 cm (34-1/2")	88 cm (34-1/2")	88 cm (34-1/2")	88 cm (34-1/2")
Rear Wheel Tread	98 cm (38-1/2")	98 cm (38-1/2")	98 cm (38-1/2")	98 cm (38-1/2")	98 cm (38-1/2")
Weight...Electric (without batteries)		206 kg (455 lbs.)	203 kg (448 lbs.)		225 kg (495 lbs.)
Weight...Gasoline (dry)	269 kg (593 lbs.)			287 kg (633 lbs.)	
Forward Speed	19-24 KPH (12-15 MPH)	19-24 KPH (12-15 MPH)	19-24 KPH (12-15 MPH)	19-24 KPH (12-15 MPH)	19-24 KPH (12-15 MPH)
Clearance Circle (diameter)	533 cm (17' 6")	533 cm (17' 6")	533 cm (17' 6")	533 cm (17' 6")	533 cm (17' 6")
Braking Distance at 19 KPH (12 MPH)	427 cm (14')	427 cm (14')	427 cm (14')	427 cm (14')	427 cm (14')

CLUB CAR LIMITED LIFETIME WARRANTY FOR 1995 FLEET GOLF CARS IN THE UNITED STATES AND CANADA

1. WARRANTY:

CLUB CAR, INC. ("CLUB CAR") hereby warrants to the Original Retail Fleet Purchaser or Original Retail Fleet Lessee, as those terms are defined herein, and subject to the provisions, limitations and exclusions contained in this limited warranty, that its new 1995 Model DS golf car purchased from CLUB CAR or an authorized distributor or dealer for use in the United States or Canada shall be free from defects in materials and workmanship under normal use and service as a golf car for the periods stated below.

LIMITED LIFETIME WARRANTY:

The golf car frame (excluding the front and rear bumper mounts), the rack and pinion steering gearbox unit, and the suspension system (defined as the shock absorbers, shock mounts, A-plate, leaf springs, shackles and associated hardware) are warranted with respect to parts and labor against defects in materials and workmanship for the lifetime of the vehicle while owned by the Original Retail Fleet Purchaser or in the possession of the Original Retail Fleet Lessee.

LIMITED THREE YEAR WARRANTY:

The gasoline engine, transmission, torque converter (drive and driven), drive unit, starter generator, and electric motor are warranted with respect to parts and labor against defects in materials and workmanship for a period of three years from the date of purchase while owned by the Original Retail Fleet Purchaser or in the possession of the Original Retail Fleet Lessee.

LIMITED TWO YEAR WARRANTY:

All remaining components of the golf car not specified otherwise are warranted with respect to parts and labor against defects in materials and workmanship for a period of two years from the date of purchase while owned by the Original Retail Fleet Purchaser or in the possession of the Original Retail Fleet Lessee.

This limited warranty covers materials, workmanship and repair labor cost as to those items specifically listed above for the periods specified. Such repair labor shall be performed only by CLUB CAR, its authorized distributors or dealers, or

a service agency approved by CLUB CAR.

IF THE WARRANTY REGISTRATION FORM IS NOT COMPLETED AND RETURNED TO CLUB CAR AT THE TIME OF THE ORIGINAL RETAIL SALE, PURCHASER MUST PROVIDE PROOF OF DATE OF PURCHASE WITH ANY WARRANTY CLAIM.

2. EXCLUSIONS:

Excluded from any CLUB CAR warranty are all optional equipment and accessories, fuses, filters, decals, spark plugs, lubricants, the front body, rear body and trim pieces, seats, routine wear items such as the charger plug and receptacle, brake shoes, belts, brushes, bushings, engine mounts, mats and pads, maintenance adjustments, cosmetic deterioration, items which deteriorate or fail due to exposure or ordinary wear and tear. Batteries and the battery charger are covered under separate Club Car warranties. Tires are warranted by their manufacturer. Also excluded from any CLUB CAR warranty is damage to a golf car or component resulting from a cause other than a defect including unreasonable or unintended strain or use, improper installation of accessories, installation of parts or accessories that are not original equipment, overloading, accident, alteration, abuse or neglect.

Transportation expenses for warranty service are also excluded from this warranty.

3. VOIDING OF WARRANTY:

THIS AND ANY OTHER WARRANTY SHALL BE VOID IF THE GOLF CAR IS ABUSED OR USED IN AN UNINTENDED MANNER OR SHOWS INDICATIONS THAT IT HAS BEEN ALTERED IN ANY WAY INCLUDING, BUT NOT LIMITED TO, MODIFICATION OF THE SPEED GOVERNOR, BRAKING SYSTEM, STEERING, DRIVE UNIT, OR OTHER OPERATING SYSTEMS OF THE CAR TO CAUSE IT TO PERFORM OUTSIDE CLUB CAR SPECIFICATIONS. THE WARRANTY IS LIKEWISE VOID IF THE CAR SHOWS INDICATIONS THAT REASONABLE OR NECESSARY MAINTENANCE AS OUTLINED IN THE OWNER'S MANUAL AND MAINTENANCE AND SERVICE MANUAL WAS NOT PERFORMED AT THE TIME AND IN THE MANNER SPECIFIED IN SUCH MANUALS.

4. SOLE REMEDY:

CLUB CAR's only liability under this limited warranty, or in any action whether based upon warranty, contract, negligence, strict product liability or otherwise, is limited to the repair or replacement, at CLUB CAR's option, of a golf car or component thereof that CLUB CAR deems to be defective. Replacement shall mean furnishing, during the applicable limited war-

ranty period, a new golf car or factory reconditioned vehicle or component thereof which is identical or reasonably equivalent to the warranted product or component at no cost to the purchaser. Repair shall mean remedying a defect in the golf car or component thereof at no cost to the purchaser during the applicable limited warranty period. If CLUB CAR elects to repair the golf car, it may provide factory reconditioned parts or components. All parts and components replaced under warranty shall become the property of CLUB CAR.

5. HOW TO MAKE A WARRANTY CLAIM:

To make a warranty claim under this limited warranty, you must present the golf car or defective component to an authorized CLUB CAR distributor or dealer or send the defective component, freight prepaid, to WARRANTY ADMINISTRATION, CLUB CAR, INC., 4152 Washington Road, P.O. Box 204658, Augusta, Georgia 30917-4658.

6. DEFINITIONS:

For the purpose of this warranty, an Original Retail Fleet Purchaser is the original purchaser of the golf car who is in the business of owning or operating golf courses and who purchases such golf car for the purpose of renting it to golf players for use on such courses. An Original Retail Fleet Lessee is the first end-user of the golf car who is in the business of owning and operating golf courses and who leases such golf car for the purpose of renting it to golf players for use on such golf courses. In the event the golf car is purchased or leased by any entity for the purpose of leasing it to an Original Retail Fleet Lessee, then this limited warranty shall extend only to the first Original Retail Fleet Lessee, and not to such entity or to any subsequent lessee of the golf car.

7. DISCLAIMER:

THIS LIMITED WARRANTY IS EXCLUSIVE. CLUB CAR MAKES NO OTHER WARRANTY OF ANY KIND, EXPRESS OR IMPLIED. ANY IMPLIED WARRANTIES OF MERCHANTABILITY OR FITNESS FOR A PARTICULAR PURPOSE WHICH EXCEED THE OBLIGATIONS OR TIME LIMITS STATED IN THIS WARRANTY ARE HEREBY DISCLAIMED BY CLUB CAR AND EXCLUDED FROM THIS WARRANTY. THE PURCHASER AND CLUB CAR EXPRESSLY AGREE THAT THE REMEDY OF REPAIR OR REPLACEMENT OF THE DEFECTIVE GOLF CAR OR COMPONENT THEREOF IS THE EXCLUSIVE AND SOLE REMEDY OF THE PURCHASER. CLUB CAR MAKES NO OTHER REPRESENTATION OR WARRANTY OF ANY KIND, AND NO REPRESENTATIVE, EMPLOYEE, DISTRIBUTOR, OR DEALER OF CLUB CAR HAS THE AUTHORITY TO MAKE OR IMPLY ANY REPRESENTATION, PROMISE, OR AGREEMENT WHICH IN ANY WAY VARIES THE TERMS OF THIS WARRANTY.

8. NO CONSEQUENTIAL DAMAGES:

IN NO EVENT SHALL CLUB CAR BE LIABLE FOR ANY INCIDENTAL OR CONSEQUENTIAL DAMAGES INCLUDING, BUT NOT LIMITED TO, LOSS RELATED TO PROPERTY OTHER THAN THE GOLF CAR, LOSS OF USE, LOSS OF TIME, INCONVENIENCE, OR ANY OTHER ECONOMIC LOSS.

Some states allow neither limitation on the duration of an implied warranty nor exclusions or limitation of incidental or consequential damages. Therefore, the above limitations or exclusions may not apply to you.

This warranty gives you specific legal rights, and you may also have other rights which vary from state to state.

9. INFORMATION:

For further information, contact WARRANTY ADMINISTRATION, CLUB CAR, INC., P.O. Box 204658, Augusta, Georgia 30917-4658, U.S.A., 706-863-3000.

10. WARNING:

Any modification or alteration of any golf car beyond factory specifications, including those that affect the weight distribution, stability, or speed of the golf car, can cause serious personal injury or death.

Club Car®

Club Car, Inc. / P.O. Box 204658
Augusta, Georgia 30917-4658 USA
706-863-3000
© CLUB CAR, INC. 1994